INSTALLATION AND OPERATION MANUAL

MVB

Modulating Vertical Boiler

Models 2503 - 4003
Type H and WH

HLW H

AHRI certification applies to H models only.

⚠WARNING: Improper installation, adjustment, alteration, service, or maintenance can cause property damage, personal injury, exposure to hazardous materials*, or loss of life. Review the information in this manual carefully. *This unit contains materials that have been identified as carcinogenic, or possibly carcinogenic, to humans.

FOR YOUR SAFETY: Do not store or use gasoline or other flammable vapors and liquids or other combustible materials in the vicinity of this or any other appliance. To do so may result in an explosion or fire.

WHAT TO DO IF YOU SMELL GAS:

- **Do not try to light any appliance.**
- **Do not touch any electrical switch; do not use any phone in your building.**
- **Immediately call your gas supplier from a neighbor's phone. Follow the gas supplier's instructions.**
- **If you cannot reach your gas supplier, call the fire department.**

Installation and service must be performed by a qualified installer, service agency or the gas supplier.

This manual should be maintained in legible condition and kept adjacent to the boiler or in a safe place for future reference.

Raypak® A Rheem® Company

CATALOG NO. 3400.56F
Effective: 08-10-20
Replaces: 06-01-19
P/N 241510 Rev. 7

Revision 7 reflects the following changes:
AHRI symbol added on page 1. Figure 6 updated on page 10. Figure 8 updated on page 11. "Mode 1 (Type H Units Only)" text revised on page 18. "Mode 2 (Type H Units Only)" text revised on page 18. "WH – Direct DHW Configuration" text revised on page 20. Text update section "Gas Supply Connections" on page 22. Figure 21 updated on page 25. Wiring the "Optional 0–10 Volt Building Control Signal" text revised, point 1, on pages 26 - 27. "Wiring the Cascade System Communication Bus" text revised on page 27. First note added on page 27. "Alarm Connection" text rised on page 27. Updated certified vent material column on Tables K, L, and N on pages 29, 30, and 31 respectively. Figure 26 updated on page 31. Figure 28, 29, 30 updated on page 32. Figure 31 updated on page 33. Table O revised on page 38. Table P revised and footnote added on page 39. Table Q revised on page 40. Illustrated Parts List added starting on page 55.

CONTENTS

1. WARNINGS 4
Pay Attention to These Terms. 4

2. GENERAL SAFETY 5
Time/Temperature Relationships in Scalds 5

3. BEFORE INSTALLATION 6
Product Receipt 6
Model Identification 6
Ratings and Certifications 6
Installations at Elevation 6
Component Locations 7

4. INSTALLATION 8
Installation Codes 8
Equipment Base 8
Clearances 9
Combustion and Ventilation Air 12
Air Filter 12
Air Supply to the Appliance 13
Conventional Combustion Air Supply 13
Water Piping 15
Hydronic Heating 17
Gas Supply 22
Electrical Power Connections 24
Field Wiring Connection 25
Venting 28
Direct Vent - Vertical 34
Condensate Management 35

5. CONTROLS 36
Ignition Control Functions 36
User Interface 38
Adjusting the Setpoint 38

6. WIRING DIAGRAM 44

7. START-UP 45
Pre Start-up 45
Pre Start-up Check 45
Start-Up 46
Post Start-Up Check 48

8. OPERATION 49
Lighting Instructions 49
To Turn Off Gas To Appliance 50

9. TROUBLESHOOTING 50
MVB Error Codes 50
Heater Errors 50
Heater Faults 50
Raymote Troubleshooting 50

10. MAINTENANCE 53
Suggested Minimum Maintenance Schedule 53
Preventive Maintenance Schedule 54
Filter Maintenance 54

11. ILLUSTRATED PARTS LIST 55

12. IMPORTANT INSTRUCTIONS FOR THE COMMONWEALTH OF MASSACHUSETTS 61

1. WARNINGS

Pay Attention to These Terms.

⚠**DANGER**	Indicates the presence of immediate hazards which will cause severe personal injury, death or substantial property damage if ignored.
⚠**WARNING**	Indicates the presence of hazards or unsafe practices which could cause severe personal injury, death or substantial property damage if ignored.
⚠**CAUTION**	Indicates the presence of hazards or unsafe practices which could cause minor personal injury or product or property damage if ignored.
CAUTION	CAUTION used without the warning alert symbol indicates a potentially hazardous condition which could cause minor personal injury or product or property damage if ignored.
NOTE	Indicates special instructions on installation, operation, or maintenance which are important but not related to personal injury hazards.

⚠**DANGER: Make sure the gas on which the heater will operate is the same type as that specified on the heater rating plate.**

⚠**WARNING: Should overheating occur or the gas supply valve fail to shut, do not turn off or disconnect the electrical supply to the heater. Instead, shut off the gas supply at a location external to the heater.**

⚠**WARNING: Do not use this heater if any part has been under water. Immediately call a qualified service technician to inspect the heater and to replace any part of the control system and any gas control which has been under water.**

⚠**WARNING: To minimize the possibility of improper operation, serious personal injury, fire, or damage to the heater:**

a. **Always keep the area around the heater free of combustible materials, gasoline, and other flammable liquids and vapors.**

b. **Heater should never be covered or have any blockage to the flow of fresh air to the heater.**

⚠**WARNING: Risk of electrical shock. More than one disconnect switch may be required to de-energize the equipment before servicing.**

⚠**CAUTION: This heater requires forced water circulation when the burner is operating. See minimum and maximum flow rates. Severe damage will occur if the heater is operated without proper water flow circulation.**

⚠**WARNING: Both natural gas and propane have an odorant added to aid in detecting a gas leak. Some people may not physically be able to smell or recognize this odorant. If you are unsure or unfamiliar with the smell of natural gas or propane, ask your local gas supplier. Other conditions, such as "odorant fade," which causes the odorant to diminish in intensity, can also hide, camouflage, or otherwise make detecting a gas leak by smell more difficult.**

⚠**WARNING: UL-recognized fuel gas detectors are recommended in all enclosed propane and natural gas applications wherein there is a potential for an explosive mixture of fuel gas to accumulate and their installation should be in accordance with the detector manufacturer's recommendations and/or local laws, rules, regulations, or customs.**

⚠**CAUTION: Operation of this heater in low temperature systems requires special piping. Harmful internal condensation will occur if the inlet water temperature does not exceed 120°F (49°C). Warranty claims will be denied when condensation occurs.**

⚠**CAUTION: If this heater is to be installed above radiation level, it must be provided with a low water cut-off device at the time of heater installation.**

⚠**CAUTION: If this heater is to be installed in a negative or positive pressure equipment room, there are special installation requirements. Consult factory for details.**

2. GENERAL SAFETY

To meet commercial hot water use needs, the high limit safety control on this water heater will shut off the main gas valve before the outlet temperature reaches 210°F (99°C). However, water temperatures over 125°F (52°C) can cause instant severe burns or death from scalds. When supplying general-purpose hot water, the recommended initial setting for the temperature control is 125°F (52°C).

This section applies to Hot Water Supply Boilers and Hot Water Heaters ONLY. For sanitary rinse applications where outlet temperatures of 180°F to 195°F (82°C to 91°C) are required, a boiler is recommended since the 210°F (99°C) limit on water heaters will NOT allow the heater to maintain these desired sanitary rinse temperatures.

Safety and energy conservation are factors to be considered when setting the water temperature on the thermostat. The most energy-efficient operation will result when the temperature setting is the lowest that satisfies the needs of the application.

Water temperature over 125°F (52°C) can cause instant severe burns or death from scalds. Children, disabled and elderly are at highest risk of being scalded.

- Feel water before bathing or showering.
- Temperature limiting valves are available.

Maximum water temperatures occur just after the heater's burner has shut off. To determine the water temperature being delivered, turn on a hot water faucet and place a thermometer in the hot water stream and read the thermometer.

NOTE: When this water heater is supplying general-purpose hot water for use by individuals, a thermostatically-controlled mixing valve for reducing point of use water temperature is recommended to reduce the risk of scald injury. Contact a licensed plumber or the local plumbing authority for further information.

⚠CAUTION: Hotter water increases the risk of scalding! There is a hot water scald potential if the thermostat is set too high.

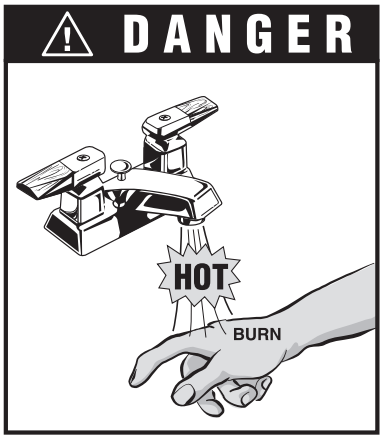

Water temperature over 125°F can cause instant severe burns or death from scalds.

Children, disabled, and elderly are at highest risk of being scalded.

See instruction manual before setting temperature at water heater.

Feel water before bathing or showering.

Temperature limiting valves are available, see manual.

Time/Temperature Relationships in Scalds

The following chart details the relationship of water temperature and time with regard to scald injury and may be used as a guide in determining the safest water temperature for your applications.

Water Temp.	Time To Produce Serious Burn
120°F (49°C)	More than 5 minutes
125°F (52°C)	1-1/2 to 2 minutes
130°F (54°C)	About 30 seconds
135°F (57°C)	About 10 seconds
140°F (60°C)	Less than 5 seconds
145°F (63°C)	Less than 3 seconds
150°F (66°C)	About 1-1/2 seconds
155°F (68°C)	About 1 seconds

Table A. Time to Produce Serious Burn

3. BEFORE INSTALLATION

Raypak strongly recommends that this manual be reviewed thoroughly before installing your MVB heater. Please review the General Safety information before installing the heater. Factory warranty does not apply to heaters that have been improperly installed or operated. (Refer to the warranty at the back of this manual.) Installation and service must be performed by a qualified installer, service agency or gas supplier. If, after reviewing this manual, you still have questions which this manual does not answer, please contact your local Raypak representative or visit our website at www.raypak.com.

Thank you for purchasing a Raypak product. We hope you will be satisfied with the high quality and durability of our equipment.

Product Receipt

On receipt of your heater it is suggested that you visually check for external damage to the shipping crate. If the crate is damaged, make a note to that effect on the Bill of Lading when signing for the shipment. Next, remove the heater from the shipping packaging. Report any damage to the carrier immediately.

On occasion, items are shipped loose. Be sure that you receive the correct number of packages as indicated on the Bill of Lading.

Claims for shortages and damages must be filed with the carrier by consignee. Permission to return goods must be received from the factory prior to shipping. Goods returned to the factory without an authorized Returned Goods Receipt number will not be accepted. All returned goods are subject to a restocking charge.

When ordering parts, you must specify the model and serial number of the heater. When ordering under warranty conditions, you must also specify the date of installation.

Purchased parts are subject to replacement only under the manufacturer's warranty. Debits for defective replacement parts will not be accepted. Parts will be replaced in kind only per Raypak's standard warranties.

Model Identification

The model identification number and heater serial number are found on the heater rating plate located on the upper rear jacket panel of the heater. The model number will have the form H7-4003 or similar depending on the heater size and configuration.

The letter(s) in the first group of characters identifies the application (H = Hydronic Heating, WH = Domestic Hot Water (DHW)). The number which follows identifies the firing mode (7 = electronic modulation).

The second group of characters identifies the size of the heater (the four numbers representing the approximate MBTUH input), and, where applicable, a letter, indicating the manufacturing series.

Ratings and Certifications

Standards:

- ANSI Z21.13 · CSA 4.9 - latest edition, Gas-Fired Hot Water Boilers
- CAN 3.1 - latest edition, Industrial and Commercial Gas-Fired Package Boilers
- ANSI Z21.10.3 · CSA 4.3 - latest edition, Gas Water Heaters
- Low-lead content (<.25%) CSA-certified

Additional data on the VERSA IC® control system installed on this unit can be found in the VERSA IC manual (5000.72).

All Raypak heaters are National Board Registered, and design-certified and tested by the Canadian Standards Association (CSA) for the U.S. and Canada. Each heater is constructed in accordance with Section IV of the American Society of Mechanical Engineers (ASME) Heater Pressure Vessel Code and bears either an ASME H-Stamp (H Boilers only), or the HLW-Stamp (for WH water heaters). This heater also complies with the latest edition of the ASHRAE 90.1 Standard.

⚠WARNING: Altering any Raypak pressure vessel by installing replacement heat exchangers, tube bundle headers, or any ASME parts not manufactured and/or approved by Raypak will instantly void the ASME and CSA ratings of the vessel and any Raypak warranty on the vessel. Altering the ASME or CSA ratings of the vessel also violates national, state, and local approval codes.

Installations at Elevation

Rated inputs are suitable for up to 4,500 ft. (1,372 m) elevation without de-rating. Consult your local representative or the factory for installations at altitudes over 4,500 ft. (1,372 m) above sea level. No hardware changes are required to the heaters for installations up to 10,000 ft. (3,048 m) (adjustments may be required).

Component Locations

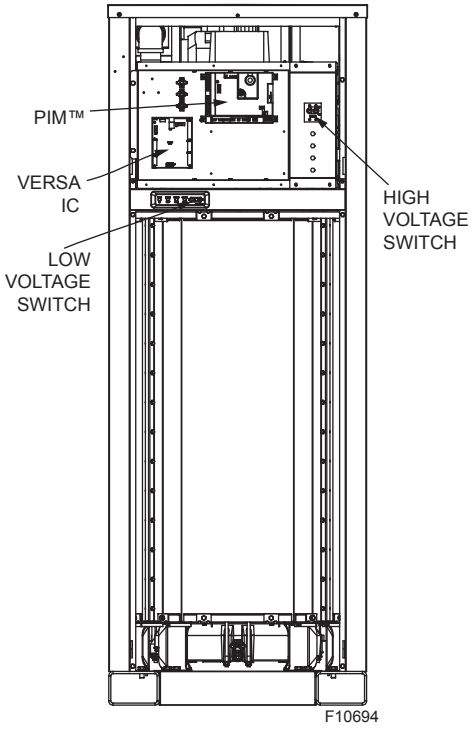

Figure 1. Component Locations - Front View

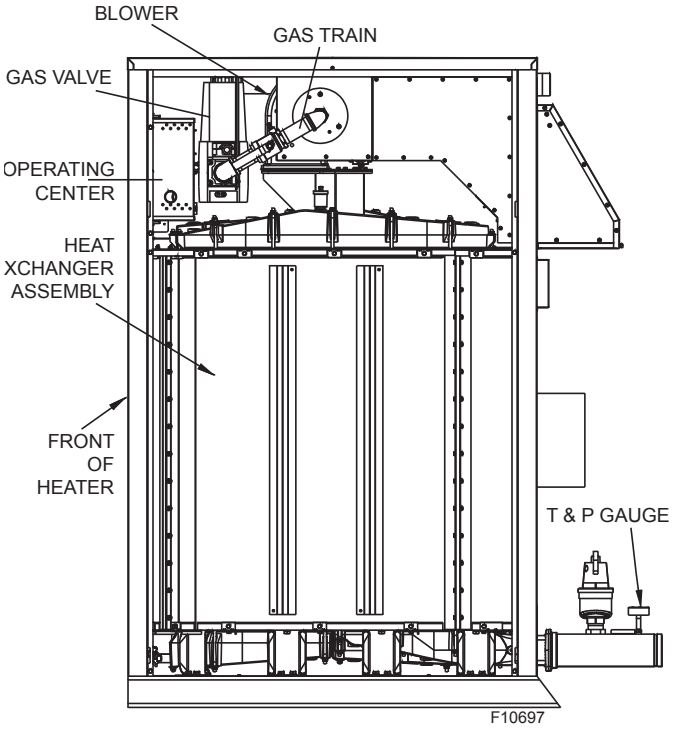

Figure 2. Component Locations - Side View

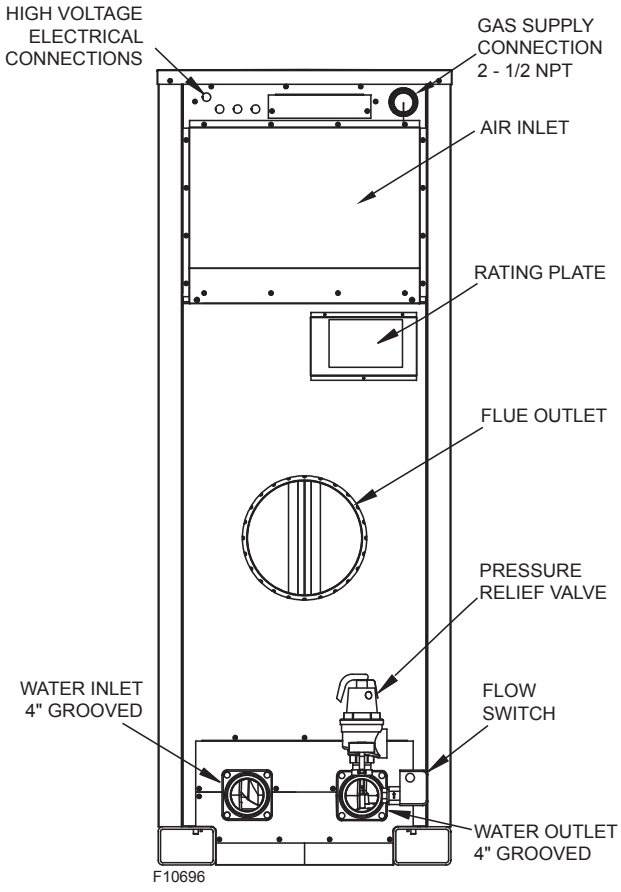

Figure 3. Component Locations - Rear View

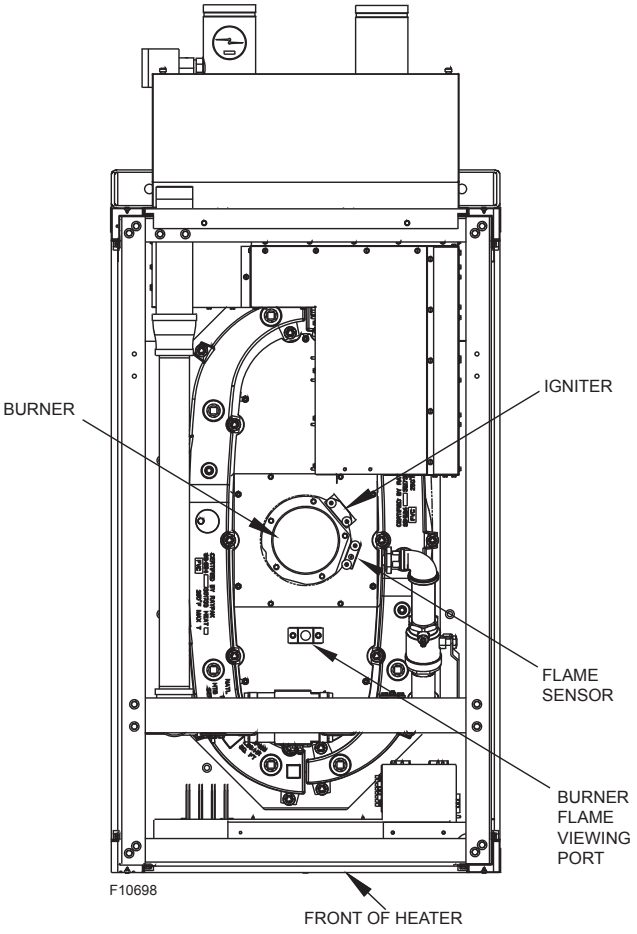

Figure 4. Component Locations - Top View

General Information

Model No.	Input MBTUH (Kw)		Vent Size in. (mm)	
	Max	Min	Flue	Intake
2503	2501 (733)	350 (103)	10 (254)	10 (254)
3003	3000 (879)	420 (123)	10 (254)	10 (254)
3503	3500 (1026)	490 (144)	12 (305)	12 (305)
4003	4000 (1172)	560 (164)	12 (305)	12 (305)

Table B. Basic Data

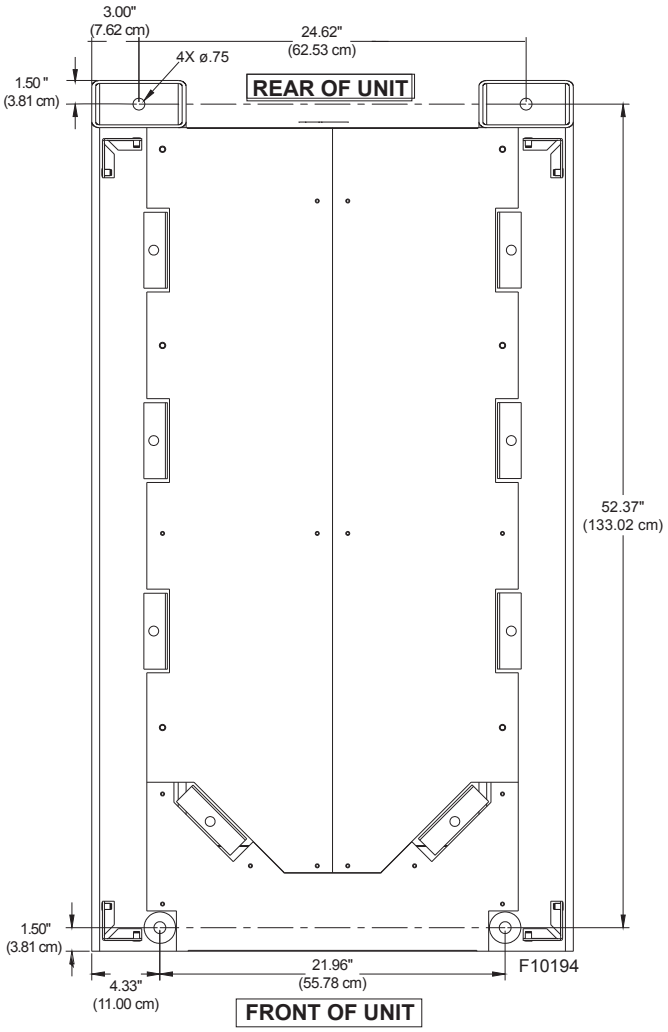

Figure 5. Anchor Hole Locations

4. INSTALLATION

Installation Codes

Installations must follow these codes:

- Local, state, and national codes, laws, regulations and ordinances
- National Fuel Gas Code, ANSI Z223.1/NFPA 54 – latest edition (NFGC)
- National Electrical Code, ANSI/NFPA 70 - latest edition (NEC)
- Standard for Controls and Safety Devices for Automatically Fired Boilers, ANSI/ASME CSD-1, (CSD-1) when required
- For Canada only: CAN/CSA B149 Natural Gas and Propane Installation Code and CSA C22.1 C.E.C. Part 1 (C22.1)

Equipment Base

The heater should be mounted on a level, structurally sound surface. The heater is approved for installation on a combustible surface but must NEVER be installed on carpeting. Gas-fueled equipment installed in enclosed parking garages must be located at least 18 in. (0.46 m) above the floor.

In addition, the heater shall be installed such that the gas ignition system components are protected from water (dripping, spraying, rain, etc.) during appliance operation or service (circulator replacement, control replacement, etc.). If the heater needs to be secured to the ground, use the hole pattern shown in **Figure 5**, following local codes.

⚠CAUTION: This heater should be located in an area where water leakage will not result in damage to the area adjacent to the appliances or to the structure. When such locations cannot be avoided, it is recommended that a suitable catch pan, adequately drained, be installed under the appliance. The pan must not restrict air flow.

Clearances

Indoor Installations

When installed according to the listed minimum clearances from combustible construction, these heaters can still be serviced without removing permanent structural construction around the heater. However, for ease of servicing, a clearance of at least 30" (76.2 cm) in front, 24" (61.0 cm) on one side, at least 36" (91.4 cm) on the rear and 10" (25.4 cm) above the top of the heater is required. This will allow the heater to be serviced in its installed location without movement or removal of the heater.

Heater Side	Minimum Clearances from Combustible Surfaces in. (mm)	Minimum Service Clearance in. (mm)
Floor *	0	0
Rear	12 (305)	36 (914)
Access Side	1 (25)	24 (610)
Opposite Side	1 (25)	1 (25)
Top	0	12 (305)
Front	Open	30 (762)
Vent	1 (25)	1 (25)

* DO NOT install on carpeting

Table C. Clearances – Indoor Installations

Service clearances less than the minimum may require removal of the heater to service either the heat exchanger or the burner components.

In either case, the heater must be installed in a manner that will enable the heater to be serviced without removing any structure around the heater.

It is possible to reduce the clearances to combustible surfaces by protecting these surfaces as shown in table 10.2.3 of the National Fuel Code. See **Table D**.

Description	Location	Distance in. (mm)
3-1/2" (89 mm) thick masonry walls without ventilated air space	Rear	9 (229)
	Outdoor Top	Unobstructed
1/2" (13 mm)insulation board over 1" (25 mm) glass fiber or mineral wool batts	Rear	6 (152)
	Outdoor Top	Unobstructed
0.024 sheet metal over 1" (25 mm) glass fiber or mineral wool batts reinforced with wire on rear face with ventilated air space	Rear	4 (102)
	Outdoor Top	Unobstructed
3-1/2" (89 mm) thick masonry wall with ventilated air space	Rear	6 (152)
	Outdoor Top	Unobstructed
0.024 sheet metal with ventilated air space	Rear	4 (102)
	Outdoor Top	Unobstructed
1/2" (13 mm) thick insulation board with ventilated air space	Rear	4 (102)
	Outdoor Top	Unobstructed
0.024 sheet metal with ventilated air space over 0.024 sheet metal with ventilated air space.	Rear	4 (102)
	Outdoor Top	Unobstructed
1" (25 mm) glass fiber or mineral wool batts sandwiched between two sheets 0.024 sheet metal with ventilated air space	Rear	4 (102)
	Outdoor Top	Unobstructed

Derived from National Fuel Gas Code, Table 10.2.3

Table D. Reduction of Clearances to Protected Surfaces

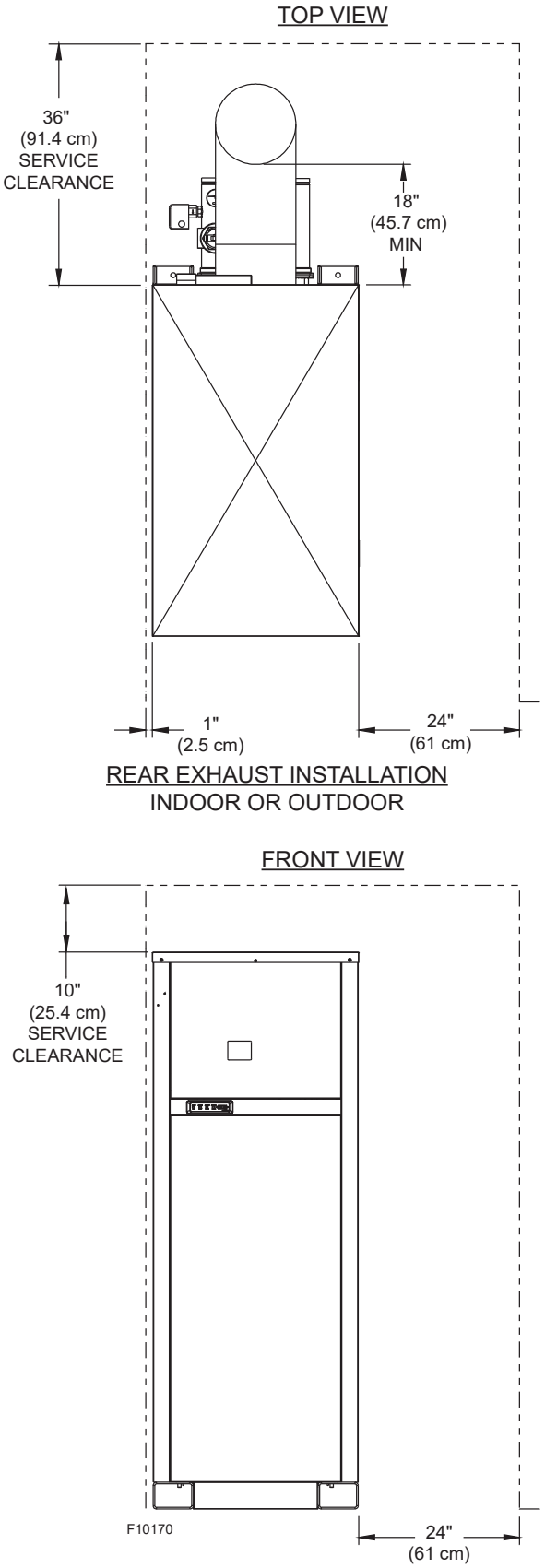

Figure 6. Minimum Clearances from Combustible Surfaces – Indoor or Outdoor Installations

Outdoor Installation

These units may be installed outdoors when used with the outdoor air intake hood. The outdoor hood must be ordered when ordering the unit, and is shipped loose for field installation.

Heaters must not be installed under an overhang unless clearances are in accordance with local installation codes and the requirements of the gas supplier. Three sides must be open in the area under the overhang. Roof water drainage must be diverted away from heaters installed under overhangs.

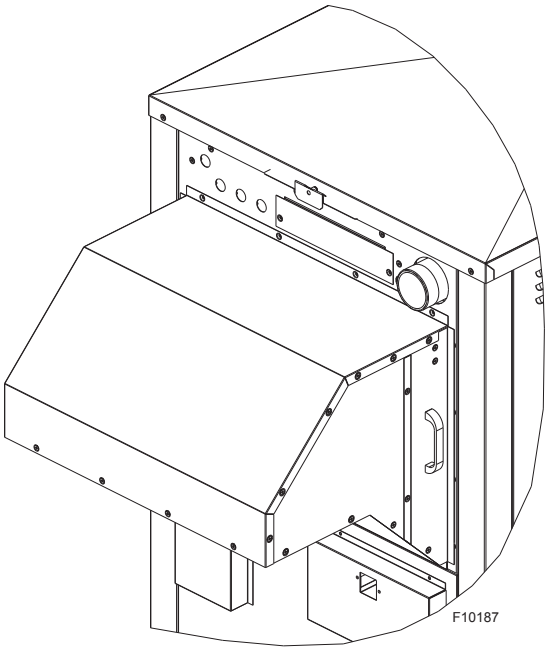

Figure 7. Outdoor Air Intake

Heater Side	Minimum Clearances from Combustible Surfaces in. (mm)	Minimum Service Clearance in. (mm)
Rear	12 (305)	36 (914)
Front	Open	30 (762)
Access Side	1 (25)	24 (610)
Opposite Side	1 (25)	1 (25)
Top	Unobstructed	12 (305)
Vent Termination	12 (305)	12 (305)

Table E. Clearances – Outdoor Installations

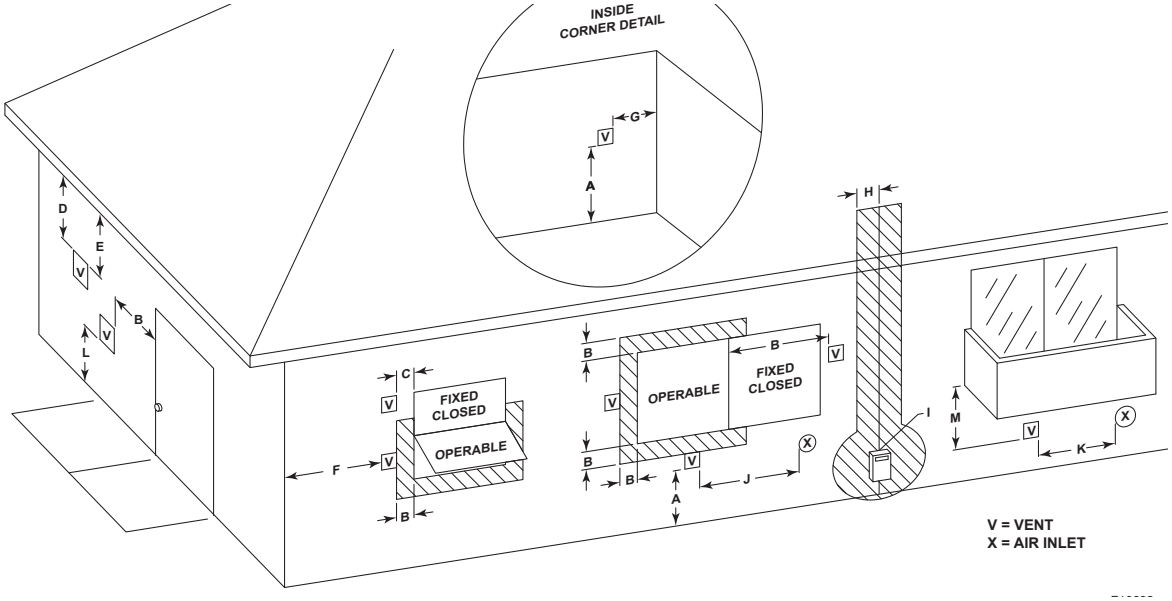

Figure 8. Minimum Clearances from Vent/Air Inlet Terminations – Indoor and Outdoor Installations

		U.S. Installations[1]	Canadian Installations[2]
A	Clearance above grade, veranda, porch, deck, or balcony	1' (30 cm)	1' (30 cm)
B	Clearance to window or door that may be opened	4' (1.2 m) below or to side of opening	3' (91 cm)
C	Clearance to permanently closed window	*	*
D	Vertical clearance to ventilated soffit located above the terminal within a horizontal distance of 2' (61 cm) from the centerline of the terminal	5' (1.5 m)	*
E	Clearance to unventilated soffit	*	*
F	Clearance to outside corner	*	*
G	Clearance to inside corner	6' (1.83 m)	*
H	Clearance to each side of center line extended above meter/regulator assembly	*	3' (91 cm) within a height 15' above the meter/regulator assembly
I	Clearance to service regulator vent outlet	*	6' (1.83 m)
J	Clearance to non-mechanical air supply inlet to building or the combustion air inlet to any other appliance	4' (1.2 m) below or to side of opening; 1' (30 cm) above opening	3' (91 cm)
K	Clearance to mechanical air supply inlet	3' (91 cm) above if within 10' (3 m) horizontally	6' (1.83 m)
L	Do not terminate above paved sidewalk or paved driveway	Slip hazard due to frozen condensate	Slip hazard due to frozen condensate
M	Clearance under veranda, porch, deck or balcony	*	12" (30 cm)[t]

1 In accordance with the current ANSI Z223.1/NFPA 54 National Fuel Gas Code.

2 In accordance with the current CAN/CSA-B149 Installation Codes.

t Permitted only if veranda, porch, deck, or balcony is fully open on a minimum of two sides beneath the floor and top of terminal, and underside of veranda, porch, deck or balcony is greater than 1' (30 cm).

***** Clearances in accordance with local installation codes and the requirements of the gas supplier.

Table F. Vent/Air Inlet Termination Clearances

Combustion and Ventilation Air

NOTE: Use of this heater in construction areas where fine particulate matter, such as concrete or dry-wall dust, is present may result in damage to the heater that is not covered by the warranty. If operated in a construction environment, a clean source of combustion air must be provided directly to the heater.

Inside Air Contamination

All heaters experience some condensation during start-up. The condensate from flue gas is acidic. Combustion air can be contaminated by certain vapors in the air which raise the acidity of the condensate. Higher acidity levels attack many materials including stainless steel, which is commonly used in high efficiency systems.

The heater can be supplied with corrosion-resistant, non-metallic intake air vent material. Choose to use outside combustion air for one or more of the following reasons:

1. Installation is in an area containing contaminants listed below which will induce acidic condensation.
2. Reduce infiltration into your building through openings around windows and doors.
3. Use AL29-4C stainless steel vent pipe, which is more corrosion-resistant than standard metallic vent pipe. In extremely contaminated ar-eas, this may also experience deterioration.

Products causing contaminated combustion air:

- spray cans containing chloro/fluorocarbons
- permanent wave solutions
- chlorinated waxes/cleaners
- chlorine-based swimming pool chemicals
- calcium chloride used for thawing
- sodium chloride used for water softening
- refrigerant leaks
- paint or varnish removers
- hydrochloric acid/muriatic acid
- cements and glues
- antistatic fabric softeners used in clothes dryers
- chloride-type bleaches, detergents, and cleaning solvents found in household laundry rooms
- adhesives used to fasten building products
- similar products

Areas where contaminated combustion air commonly exists:

- dry cleaning/laundry areas
- metal fabrication plants
- beauty shops
- refrigeration repair shops
- photo processing plants
- auto body shops
- plastic manufacturing plants
- furniture refinishing areas and establishments
- new building construction
- remodeling areas
- open pit skimmers

Check for areas and products listed above before installing heater. If found:

- remove products permanently, OR
- install TruSeal direct vent.

Indoor Units

This heater must be supplied with sufficient quantities of non-contaminated air to support proper combustion and equipment ventilation. Combustion air can be sup-plied via conventional means where combustion air is drawn from the area immediately surrounding the heater, or via direct vent, where combustion air is drawn directly from outside. All installations must comply with the requirements of the NFGC (U.S.) and all local codes.

⚠ CAUTION: Combustion air must not be contaminated by corrosive chemical fumes which can damage the heater and void the warranty.

NOTE: It is recommended that the intake vent be insulated to minimize sweating.

Air Filter

An air filter is supplied standard with the heater.

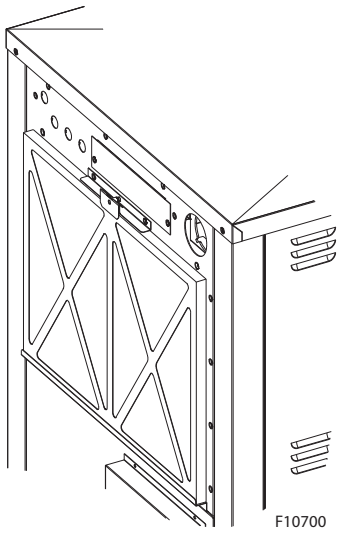

Figure 9. Air Filter

Air Supply to the Appliance

As-shipped, air is drawn from the surroundings through the air filter box into the intake port, directly to the blower.

This is adequate for outdoor installations and most indoor installations (see the following sections for Conventional Combustion Air Supply, for the US and Canada).

However, it is sometimes necessary to isolate the appliance from room air, bringing air to the unit via duct. Isolating the combustion air supply from room air in this fashion meets the requirements of a direct-vent system. Raypak refers to this approach as "TruSeal®".

Please bear in mind that when a unit is direct-vented, the room still needs ventilation - but the standard requirements for ventilation volume or opening size are reduced.

⚠CAUTION: Use TruSeal® combustion ducting if damaging airborne contaminants are or may be present in the heater area.

Truseal® Combustion Air Supply

1. Connect the air filter box to the intake collar of the heater, following the instructions given in the air filter kit (instruction sheet 241338). Remove the screen assembly.
2. Connect air ducting to the intake collar on the air filter. The duct material may be PVC, CPVC, or sealed single-wall galvanized ducting. Use 3-4 sheet metal screws (not supplied), equally-spaced around the collar. Seal the screws and duct connection point with RTV (not supplied). The installer should review instruction sheet 241520 prior to installing combustion air vertically. Connecting the duct vertically may impact access to the electrical connection points.
3. Install the remaining air intake duct to a suitable intake point, per applicable codes. See **Figure 31** (horizontal) or **Figure 32** (vertical). All ducting must be self-supported.
4. In cold climates, and to mitigate potential freeze-up, Raypak highly recommends the installation of a motorized sealed damper to prevent the circulation of cold through the heater during the non-operating hours. When dampers or louvers are communicating directly with outside combustion air, they must be interlocked with each appliance in the equipment room, to ensure proper operation. See **"Field Wiring Connection" on page 25** of this manual for proper wiring instructions, using the Fan/Damper dry contacts and the external interlock connection.
5. Ventilation of the space occupied by the heater(s) is required and can be provided by an opening(s) for ventilation within 12" (305 mm) of the highest practical poinf communicating with the- outdoors. When the opening communicates directly with the outdoors or through vertical ducts, the total cross-sectional areas must be at least 1 $in.^2$ of free area per 20,000 BTUH (111 mm^2 per kW) or total input rating of all equipment in the room. When the opening communicates with the outdoors through horizontal ducts, the cross-sectional net free area must be at least $in.^2$ of free area per 10,000 BTUH (222 mm^2 per kW). Damage to the equipment due to inadequate ventilation of the space is not a warrantable failure.

Motorized Combustion Air Dampers or Louvers

When motorized dampers or louvers are communicating directly with outside combustion air, they must be interlocked with each appliance in the equipment room, to ensure proper operation. See **"Field Wiring Connection" on page 25** of this manual for proper wiring instructions, using Fan/Damper dry contacts and external interlock.

Conventional Combustion Air Supply

⚠CAUTION: Use TruSeal combustion air if damaging airborne contaminants are or may be present in the heater area. See "Inside Air Contamination" on page 12 of this manual regarding air contamination.

US Installation

All Air from Inside the Building

The confined space shall be provided with **TWO** permanent openings communicating directly with an additional room(s) of sufficient volume so that the combined volume of all spaces meets the criteria for a room large in comparison with the heater(s) (NFGC). The total input of all gas utilization equipment installed in the combined space shall be considered in making this determination.

Each opening shall have a minimum free area of 1 $in.^2$ per 1,000 BTUH (2,225 mm^2 per kW) of the total input rating of all gas utilization equipment in the confined space, but not less than 100 $in.^2$ (645 cm^2). One opening shall commence within 12" (305 mm) of the top of the enclosure, and one opening shall commence within 12" (305 mm) of the bottom of the enclosure.

The minimum dimension of air openings shall be not less than 3" (76 mm) in any direction.

All Air from Outdoors

The confined space shall communicate with the outdoors in accordance with one of the methods below. The minimum dimension of air openings shall not be less than 3" (76 mm) in any direction. Where ducts are used, they shall be of the same cross-sectional area as the net free area of the openings to which they connect.

1. **Two permanent openings,** one commencing within 12" (305 mm) of the top, and one commencing within 12" (305 mm) of the bottom of the enclosure, shall be provided. The openings shall communicate directly, or by ducts, with the outdoors or spaces (crawl or attic) that freely communicate with the outdoors.
   a. Where directly communicating with the outdoors or where communicating to the outdoors through vertical ducts, each opening shall have a minimum free area of 1 $in.^2$ per 4,000 BTUH (550 mm^2 per kW) of total input rating of all equipment in the enclosure.
   b. Where communicating with the outdoors through horizontal ducts, each opening shall have a minimum free area of 1 $in.^2$ per 2,000 BTUH (1,100 mm^2 per kW) of total input rating of all equipment in the enclosure.
2. **One permanent opening,** commencing within 12" (305 mm) of the top of the enclosure, shall be permitted where the equipment has clearances of at least 1" (25 mm) from the sides and back and 6" (152 mm) from the front of the appliance. The opening shall directly communicate with the outdoors or shall communicate through a vertical or horizontal duct to the outdoors or spaces that freely communicate with the outdoors, and shall have a minimum free area of:
   a. 1 $in.^2$ per 3,000 BTUH (740 mm^2 per kW) of the total input rating of all equipment located in the enclosure, and
   b. Not less than the sum of the areas of all vent connectors in the confined space.

⚠WARNING: Do not use the "one permanent opening" method if the equipment room is under negative pressure conditions.

Canadian Installations

1. Ventilation of the space occupied by the heater shall be provided by an opening(s) for ventilation air at the highest practical point communicating with the outdoors. The total cross-sectional area of such an opening(s) shall be at least 10% of the area required in 2. and 3. (below), but in no case shall the cross-sectional area be less than 10 $in.^2$ (65 cm^2).
2. For heaters using a barometric damper in the vent system there shall be a permanent air supply opening(s) having a cross section area of not less than 1 $in.^2$ per 7,000 BTUH (320 mm^2 per kW) up to and including 1 million BTUH, plus 1 $in.^2$ per 14,000 BTUH (160 mm^2 per kW) in excess of 1 million BTUH. This opening(s) shall be either located at or ducted to a point not more than 18" (450 mm) nor less than 6" (152 mm) above the floor level. The duct can also "goose neck" through the roof. The duct is preferred to be straight down and terminated 18" (450 mm) from the floor, but not near piping. This air supply opening requirement shall be in addition to the air opening for ventilation air required in 1 (above).

⚠WARNING: Care must be taken to ensure that the equipment room is not under negative pressure conditions.

3. For heaters not using a barometric damper in the natural air flow from outdoors for a power burner and there is no draft, regulator, drafthood or similar flue gas dilution device installed in the same space, in addition to the opening for ventilation air required in 1., there shall be a permanent air sup- ply opening(s) having a total cross-sectional area of not less than 1 $in.^2$ for each 30,000 BTUH (74 mm^2 per kW) of total rated input of the burner(s), and the location of the opening(s) shall not interfere with the intended purpose of the opening(s) for ventilation air referred to in 1. This opening(s) can be ducted to a point not more than 18" (450 mm) nor less than 6" (152 mm) above the floor level. The duct can also "goose neck" through the roof. The duct is preferred to be straight down 18" (450 mm) from the floor, but not near piping.
4. Refer to the B149 Installation Code for additional information.

Water Piping

General

The heater should be located so that any water leaks will not cause damage to the adjacent area or structures.

⚠CAUTION: This heater requires forced water circulation when the burner is operating. See Table G and Table H for minimum and maximum flow rates. The pump must be interlocked with the heater to prevent heater operation without water circulation.

NOTE: Minimum pipe size for in/out connections is 3 in. Verify proper flow rates and ∆T as instructed in this manual. Flange connections are provided.

Relief Valve Piping

⚠WARNING: Pressure relief valve discharge piping must be piped near the floor and close to a drain to eliminate the potential of severe burns. Do not pipe to any area where freezing could occur. Refer to local codes.

Temperature and Pressure Gauge

The temperature and pressure gauge is shipped installed on the boiler outlet assembly. Installation must comply with ASME Section IV as well as all applicable national, state and local codes.

Hydrostatic Test

Unlike many types of heaters, this heater does not require hydrostatic testing prior to being placed in operation. The heat exchanger has already been factory-tested and is rated for 160 psi (1.1 MPa) operating pressure. However, Raypak does recommend hydrostatic testing of the piping connections to the heater and the rest of the system prior to operation. This is particularly true for hydronic systems using expensive glycol-based anti-freeze. Raypak recommends conducting the hydrostatic test before connecting gas piping or electrical supply.

Leaks must be repaired at once to prevent damage to the heater. NEVER use petroleum-based stop-leak compounds.

To perform hydrostatic test:

1. Connect fill water supply. With bleed valve open, fill heater with water. When water flows from bleed valve, shut off water. Close bleed valve. Carefully fill the rest of the system, making sure to eliminate any entrapped air by using high-point vents. Close feed valve. Test at standard operating pressure for at least 24 hours.
2. Make sure constant gauge pressure has been maintained throughout test.
3. Check for leaks. Repair any that are found.

Flushing/Cleaning of System Piping

Many of the chemicals used to perform this function will harm the heat exchanger as well as some gaskets and seals within the unit, causing a non-warrantable failure. When required, Raypak recommends the boiler be isolated from the system piping prior to flushing or cleaning using any cleaning agent.

⚠CAUTION: Damage due to internal condensation may occur if the heater inlet water temperature does not exceed 120°F (49°C) within 7 minutes of start-up.

Cold Water Operation

This heater is equipped with a proprietary condensate evaporation system which will evaporate any condensate that may begin to accumulate inside the primary heat exchanger with water temperatures as low as 120°F (49°C).

Heaters operated with an inlet temperature of less than 120°F (49°C) MUST have an approved low-temperature operation system (**Figure 10** and **Figure 11**) to prevent problems with condensation. Inlet water temperatures below 120°F (49°C) can excessively cool the products of combustion, resulting in collection of condensate in the heat exchanger area beyond the capacity of the condensate evaporation system.

Failure to reach or exceed 120°F (49°C) may damage or cause failure of the heat exchanger, combustion chamber, or other parts within the combustion chamber. It can cause operational problems, bad combustion, sooting, flue gas leakage and reduced service life of the appliance and the vent system. A bypass allows part of the heater discharge water to be mixed with the cooler water returning to the heater inlet to increase the heater inlet temperature above 120°F (49°C).

This precautionary measure should prevent the products of combustion from condensing beyond the ability of the condensate management system employed in this heater in most installations. Warranty claims will be denied for damage or failures caused by condensation.

Cold Water Start

Cold water start, where the inlet water temperature starts below 120°F (49°C), but rises above that temp in normal operation, ***must*** **have cold water start protection.** Known protection methods consist of mixing heated outlet water with the inlet water using a bypass to raise the inlet to 120°F (49°C) or higher. Once the system is heated up and has return water temperatures of 120°F (49°C) or higher, the mixing of outlet water with inlet water is no longer needed and the bypass can be shut off.

If the bypass is not shut off as the system heats up, the outlet temperature may continue to climb and trip the high limit, thereby shutting down the heater. Thus an automatic valve system, such as a three-way proportional valve to control the bypass, should be used. See **Figure 10**.

Cold water start may also be used for low temp hydronic applications such as water-source heat pumps.

Cold Water Run

Cold water run differs from cold water start in that the system water entering the heater remains below 120°F (49°C) continuously. This is the case in water-source heat-pump applications, for example.

If the system water is kept in a narrow temperature range of no more than 10°F (5°C), a permanent manual bypass can be employed and manually adjusted to achieve an inlet temperature of 120°F (49°C) or higher as adjusted at the minimum temperature in this narrow temperature range [For example, if the Range is 75°F to 85°F (24°C to 29°C), adjust the bypass with temperature at 75°F (24°C)] so that when the temperature is 85°F (29°C), the minimum inlet temperature would be 130°F (54°C).

An injector pump arrangement may also be utilized to keep the heater loop at or above 120°F (49°C). See **Figure 11**.

An injector pump approach has the added value of being able to adjust to changes in the system water coming back to the heater.

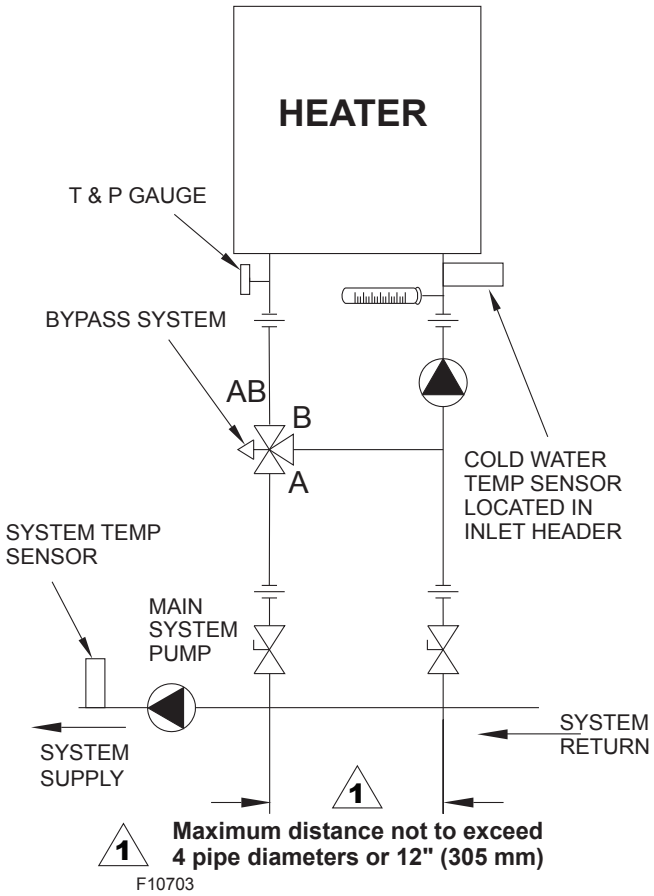

Figure 10. Cold Water Start

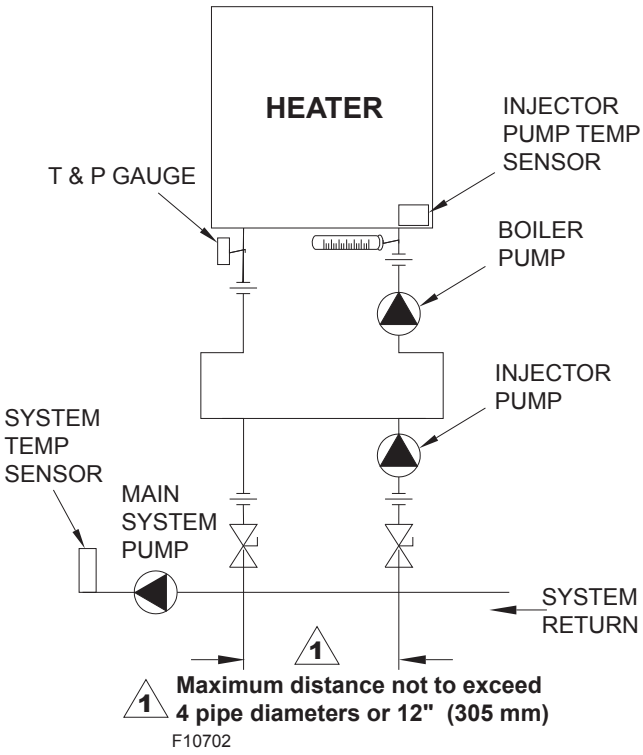

Figure 11. Cold Water Run

Hydronic Heating

Pump Selection

In order to ensure proper performance of your heater system, you must install a correctly-sized pump. Raypak requires designing for a ΔT within the range of 16°F to 39°F (9°C to 22°C). See **Table G** for acceptable flow rates for each model (ΔT is the temperature difference between the inlet and outlet water when the heater is firing at full rate).

Feedwater Regulator

Raypak recommends that a feedwater regulator be installed and set at 12 psi (82.7kPa) minimum pressure at the highest point of the system. Install a check valve or back flow device upstream of the regulator, with a manual shut-off valve as required by local codes.

Piping

NOTE: Hot water heating systems all have unique levels of operating diversity that must be accounted for in the system design. The system should always include system flow of at least 115% of the connected boiler flow for proper operation. Where the system flow may drop below the connected boiler flow, a buffer/decoupler may be needed. Failure to design for adequate flow (i.e. bypasses, 3-way control valves, flow limiting balance devices, buffer tanks, etc.) will result in boiler short cycling and may reduce boiler life. Always contact your local Raypak representative for system design assistance to avoid these issues.

All high points should be vented. A heater installed above radiation level must be provided with a low water cut-off device (option F-10). This heater, when used in connection with a refrigeration system, must be installed so that the chilled medium is piped in parallel with the heater with appropriate valves to prevent the chilled medium from entering the heater.

The piping system of a hot water heater connected to heating coils located in air handling units where they may be exposed to circulating refrigerated air, must be equipped with flow control valves or other automatic means to prevent gravity circulation of the heater water during the cooling cycle. It is highly recommended that the piping be insulated.

For a primary/secondary piping system, system flow must exceed boiler flow at all times to prevent the boiler from rapidly tripping on its high limit. Raypak strongly recommends that system from be a minmum of 115% of boiler flow.

Air-Separation/Expansion Tank

All heaters should be equipped with a properly-sized expansion tank and air separator fitting as shown in **Figure 12**.

Three-Way Valves

Three-way valves intended to regulate system water temperatures by reducing flow in the boiler should not be used. Raypak heaters are high-recovery, low-mass heaters which are not subject to thermal shock.

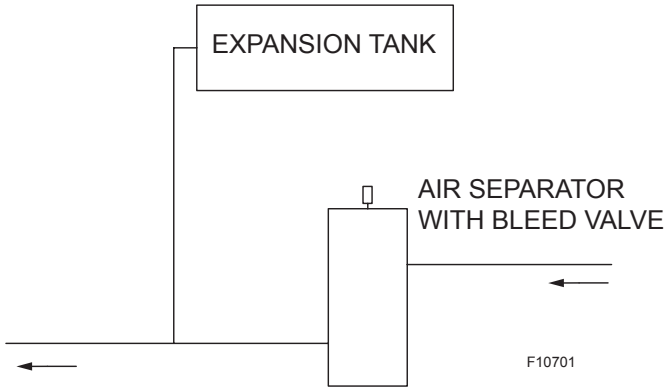

Figure 12. Air-Separation/Expansion Tank

MVB Model	20° ΔT				30° ΔT				39° ΔT		Min Flow					Max Flow				
	GPM	ΔP	SHL 3" Pipe	SHL 4" Pipe	GPM	ΔP	SHL 3" Pipe	SHL 4" Pipe	GPM	ΔP	GPM	ΔP	ΔT	SHL 3" Pipe	SHL 4" Pipe	GPM	ΔP	ΔT	SHL 3" Pipe	SHL 4" Pipe
2503	213	11.7	N/A	14.3	142	6.2	10.7	7.4	N/A	N/A	120	4.7	35	8.0	5.6	264	15.7	16	N/A	19.6
3003	255	21.7	N/A	25.3	170	10.3	16.6	12.0	131	6.3	131	6.3	39	10.2	7.4	264	23.1	19	N/A	27.0
3503	N/A	N/A	N/A	N/A	198	15.2	N/A	17.5	153	9.1	153	9.1	39	14.3	10.5	264	26.8	23	N/A	30.6
4003	N/A	N/A	N/A	N/A	227	23.7	N/A	26.6	174	13.5	174	13.5	39	20.1	15.3	264	33.5	26	N/A	37.4

Notes: Basis for minimum flow is ΔT . Basis for maximum flow is gpm.
ΔT = Temperature rise, °F
ΔP = Pressure drop through heat exchanger, ft. W.C.
SHL = System head loss, ft. W.C. (based on connections of no more than 75 eq. ft. of piping)
gpm = Gallons per minute, flow rate

Table G. Heater Rates of Flow and Pressure Drops

Applications and Modes

The VERSA IC Control system is designed for a wide range of applications. The installer/design engineer should refer to the following Modes to determine which best fits the intended application and functionality for the unit being installed.

Type H models of MVB have three modes available to them to address the various applications the units can be applied to. Type WH units will only have the WH configuration available to them for use with potable water applications when directly connected to a hot water storage tank. See the VERSA IC manual (5000.72) for detailed information. This manual can be found in the document library at www.raypak.com.

Mode 1 (Type H Units Only)

This mode selection is for hydronic heating systems with single or multiple boilers (refer to VERSA IC Manual [5000.72] for detailed Cascade operation) in primary/secondary piping configuration with or without Outdoor Air Reset (S4). The system temperature is controlled by the System sensor (S3). The Boiler Pump (P1) runs during any call for heat. The System Pump (P2) runs whenever the system is enabled for heating and the outdoor air temperature is lower than the warm weather shut down (WWSD) temperature setting (if utilized). The Boiler Pump and System Pump are delayed “off” as user defined in the ADJUST menu.

NOTE: MODE 1 can also be used for process heating applications in conjunction with a buffer/storage tank when operating temperatures above 160°F (71°C) are required. Care must be taken to ensure water hardness is no more than 15 grains per gallon for scale free operation

Mode 2 (Type H Units Only)

This mode selection is for hydronic heating systems with single or multiple boilers in primary/secondary piping configuration with or without Outdoor Air Reset (S4) with indirect DHW on the system loop (with or without priority). The system temperature is controlled by the System sensor (S3). The Indirect DHW sensor (S5) determines the indirect call/tank setpoint. The system temperature is boosted to Target Max when using the Indirect DHW sensor (S5) during an indirect call for heat. Priority mode toggles off the System Pump (P2) when an indirect call for heat is present.

The Boiler Pump (P1) runs during any call for heat. The Indirect DHW Pump (P3) runs during an indirect call for heat with no “off” delay. The Boiler Pump (P1) and System Pump (P2) delay “off” as user defined in the ADJUST menu. The System Pump (P2) runs whenever the system is enabled for heating and the outdoor air temperature is lower than the WWSD temperature setting (if utilized) unless an indirect call for heat is present with priority.

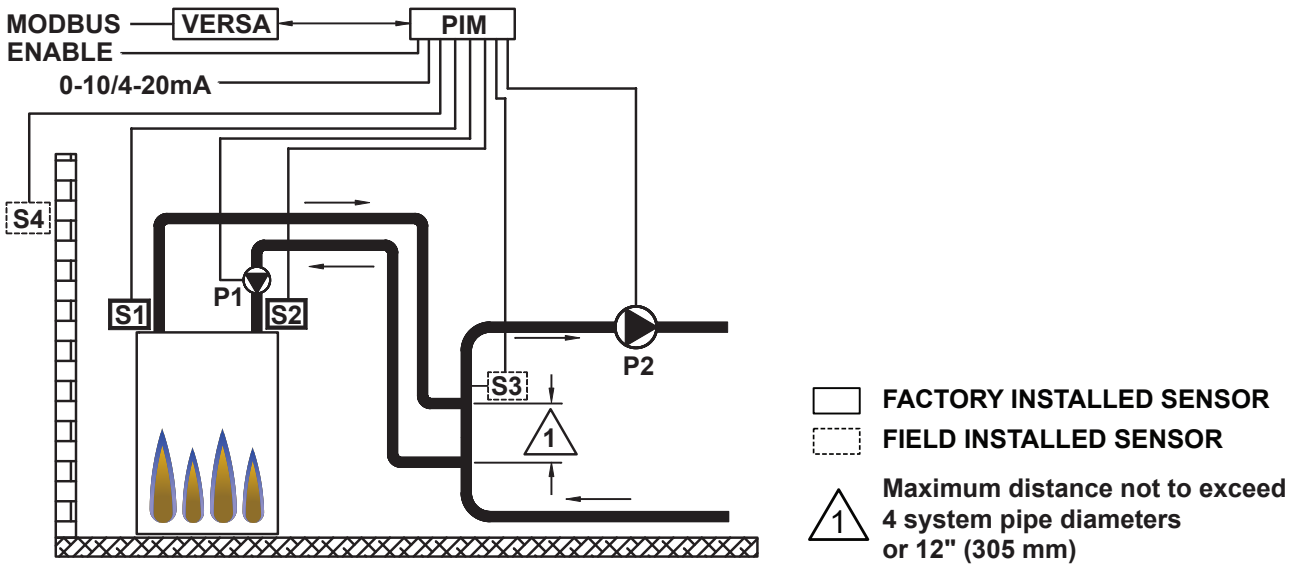

Figure 13. MODE 1 - Single Boiler with Primary/Secondary Piping

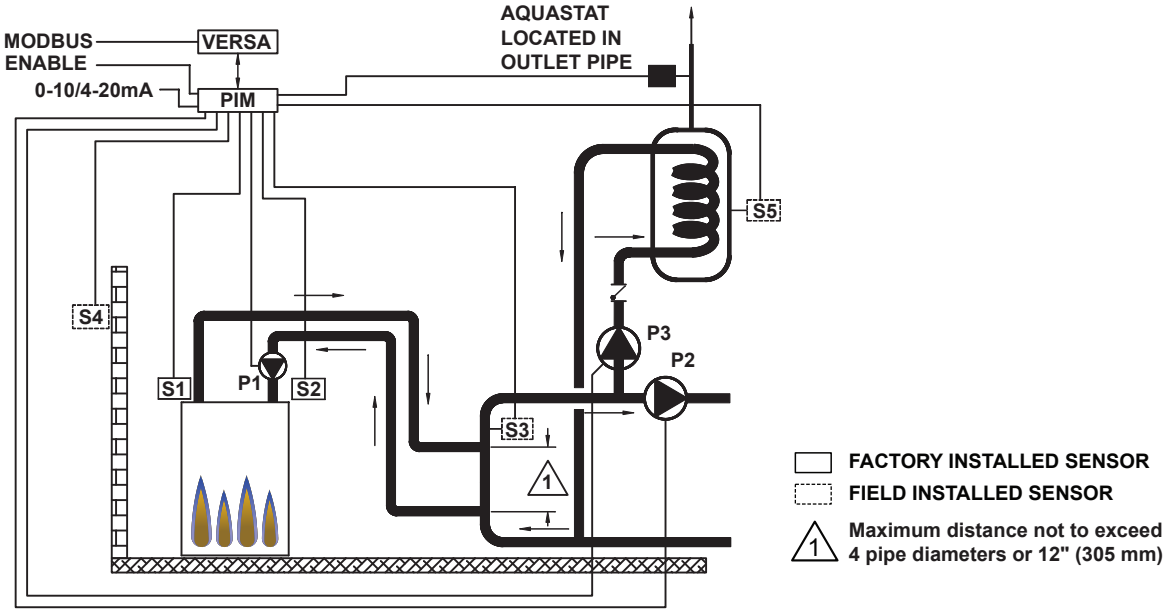

Figure 14. MODE 2 - Single Boiler with Indirect on System Loop - Primary/Secondary Piping

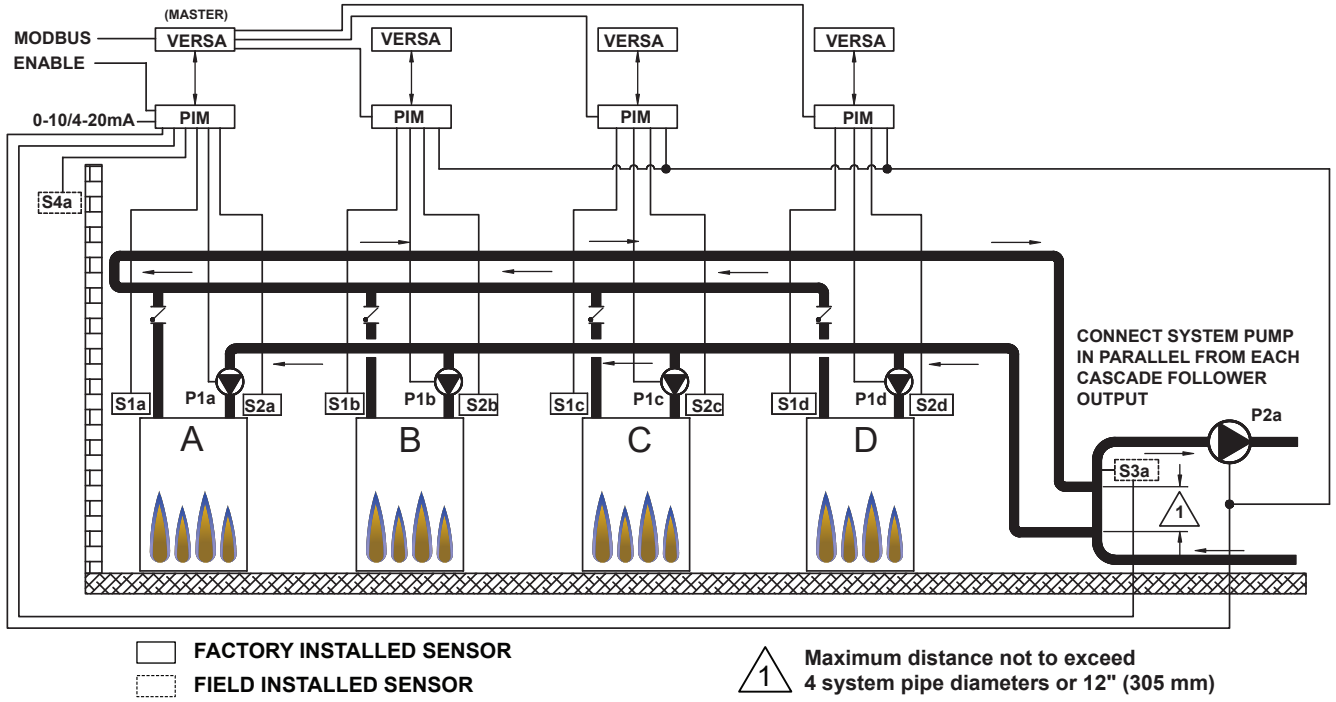

Figure 15. MODE 1 - Recommended Boiler Cascade with Primary/Secondary Piping

Mode 3 (Type H Units Only)

This mode selection is for hydronic heating systems with single or multiple boilers in primary/secondary piping configuration with or without Outdoor Air Reset (S4) with indirect DHW on the boiler loop (with priority). The system temperature is controlled by the Supply sensor (S3) whenever the indirect call for heat is not active. The DHW Supply sensor (S5) determines the indirect call/tank setpoint. During an indirect call for heat the boiler firing rate is determined by the water temperature at the Indirect Supply sensor (S6) and the Target Max setting when using the Indirect DHW sensor (S5). The Boiler Pump (P1) runs during all heat calls regardless of priority. The Indirect DHW Pump (P3) runs during an indirect call for heat with no "off" delay. The Boiler Pump (P1) and System Pump (P2) delay "off" as user defined in the ADJUST menu. The system pump (P2) runs whenever the system is enabled for heating and the outdoor air temperature is lower than the WWSD temperature setting (if utilized) unless an indirect call for heat is present.

NOTE: A Tank Aquastat can be used in lieu of the Indirect DHW Sensor (S5). See the VERSA IC manual (5000.72) for detailed information.

Domestic Hot Water

When designing the water piping system for domestic hot water applications, water hardness should be considered. **Table H** indicates the suggested flow rates for soft, medium and hard water. Water hardness is expressed in grains per gallon.

WH – Direct DHW Configuration

When the unit is ordered as a "WH" configuration the only application available to it is direct DHW for single or multiple heaters; see VERSA IC Manual 5000.72 for more information on cascade systems. The tank temperature is controlled by the System sensor (S3). The Boiler Pump (P1) runs during any call for heat. The System Pump (P2) output is active whenever the system is enabled. The Boiler Pump is delayed "off" after the Tank Target temperature is achieved and as user defined in the ADJUST menu.

NOTE: WH units will operate to a maximum tank temperature of 160°F (71°C). For temperatures required above 160°F (71°C) an "H" model boiler must be used and great care must be given to ensure water hardness is no more than 15 grains per gallon for scale free operation. MODE 1 should be used and configured for setpoint operation for process heating applications.

NOTE: If local codes require a vacuum relief valve, acquire one locally and install per valve manufacturer's instructions.

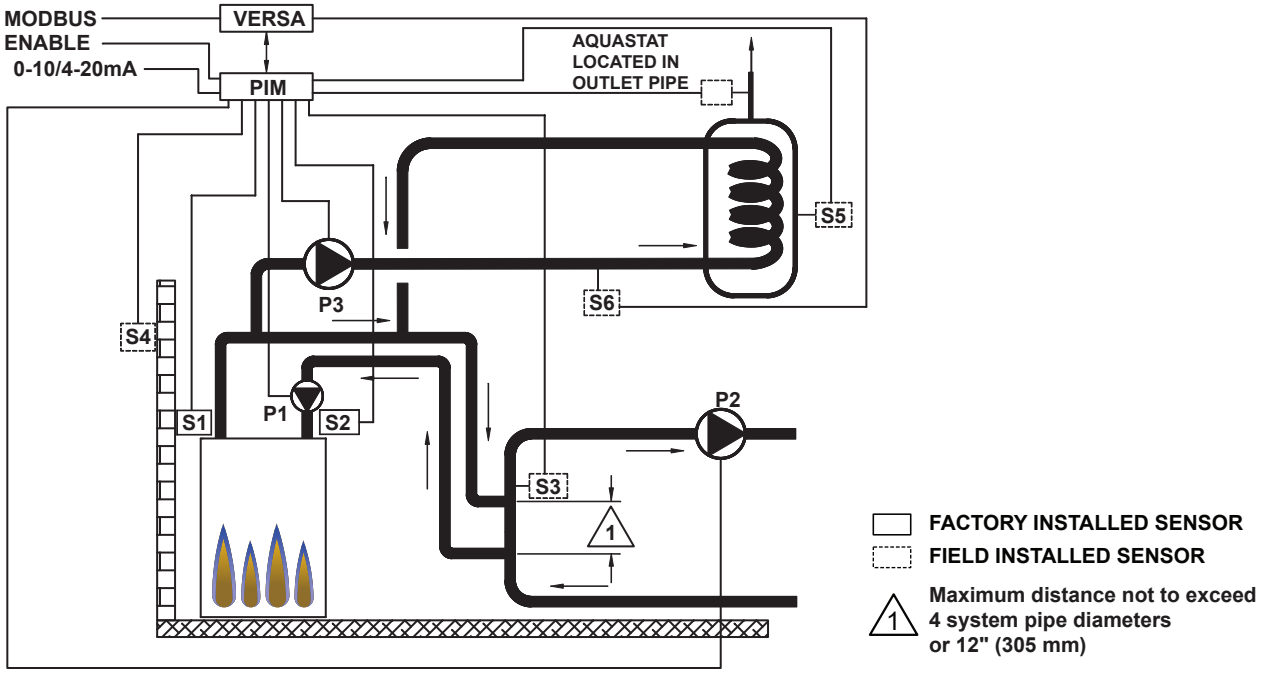

Figure 16. MODE 3 - Single Boiler with Indirect on Boiler Loop

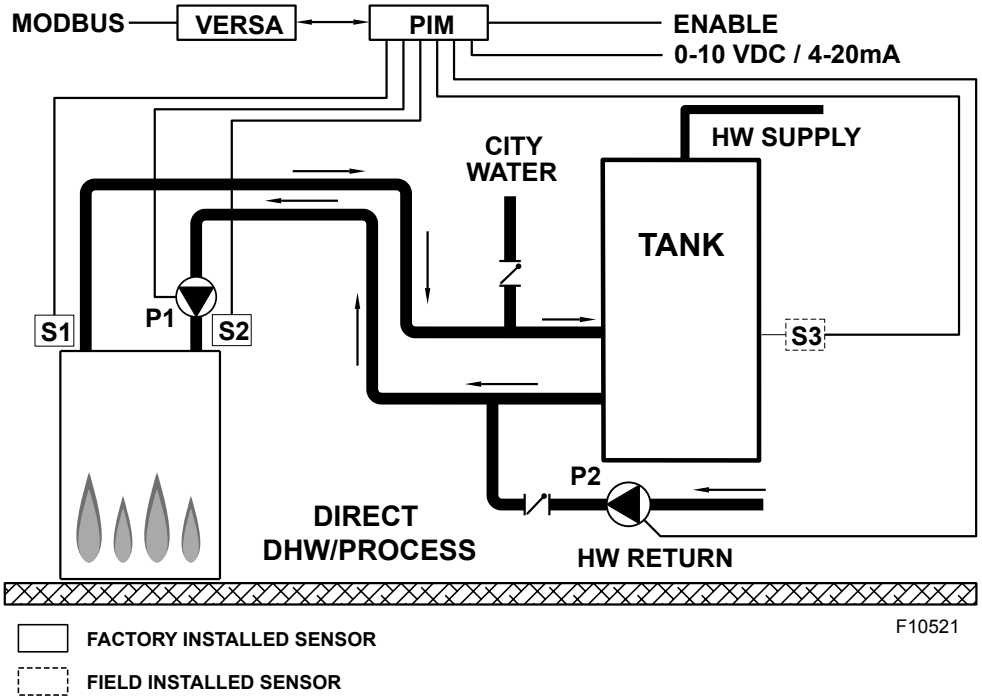

Figure 17. WH Units - Single Water Heater with Tank
H Units - Single Boiler with Process Tank

MVB Model	WATER HARDNESS														
	SOFT					MEDIUM					HARD*				
	0-4 Grains Per Gallon					5-15 Grains Per Gallon					16-25** Grains Per Gallon				
	ΔT (°F)	GPM	ΔP (ft. wc)	MTS (in)	SHL (ft. wc)	ΔT (°F)	GPM	ΔP (ft. wc)	MTS (in)	SHL (ft. wc)	ΔT (°F)	GPM	ΔP (ft. wc)	MTS (in)	SHL (ft. wc)
2503	29	147	6.6	4	7.9	20	213	11.7	4	14.4	16	264	15.7	4	20.0
3003	29	176	11.0	4	12.8	20	255	21.7	4	25.6	19	264	23.1	4	27.3
3503	29	205	16.3	4	18.8	23	264	26.8	4	31.0	23	264	26.8	4	31.0
4003	29	234	25.6	4	28.9	26	264	33.5	4	37.7	26	264	33.5	4	37.7

ΔT = Temperature rise, °F
ΔP = Pressure drop through heat exchanger, ft. W.C.
SHL = System head loss, ft. W.C. (based on heater and tank connections of no more than 100 eq. ft. of tubing)
gpm = Gallons per minute, flow rate
MTS = Minimum tubing size
*Must utilize optional cupro-nickel tubes. If over 25 grains per gallon, a water softener/treatment system must be utilized.
Caution: For scale free operation with "Hard Water" (16-25 grains per gallon of total hardness), the operating control must NOT be set higher than 130°F (54°C). For higher than 130°F (54°C) operation, a water softener/treatment system must be utilized.
***Care should be given to prevent over-softening of the water as over-softened water can become aggressive. Cupro-nickel tubes are recommended for water softened below 5 grains per gallon.

Table H. Domestic Water Heater Flow Rate Requirements

Potable Water and Space Heating

⚠CAUTION: When this heater is used for both potable water and space heating, observe the following to ensure proper operation.

1. All piping materials and components connected to the water heater for the space heating application shall be suitable for use with potable water.
2. Toxic chemicals, such as used for boiler treatment, shall not be introduced into the potable water used for space heating.
3. If the heater will be used to supply potable water, it shall not be connected to any heating system or components previously used with a non-potable water heating appliance.
4. When the system requires water for space heating at temperatures higher than 140°F (60°C), a means such as a mixing valve shall be installed to temper the water in order to reduce scald hazard potential.

Automatic Chemical Feeders

All chemicals must be introduced and completely diluted into the water before being circulated through the heater. High chemical concentrations will result when the pump is not running (e.g. overnight).

NOTE: High chemical concentrates from feeders that are out of adjustment will cause rapid corrosion to the heat exchanger. Such damage is not covered under the warranty.

NOTE: Failure of a heat exchanger due to lime scale build-up on the heating surface, low pH or other chemical imbalance is non-warrantable.

⚠CAUTION: Combustion air must not be contaminated by corrosive chemical fumes which can damage the heater and void the warranty.

Gas Supply

⚠DANGER: Make sure the gas on which the heater will operate is the same type as specified on the heater's rating plate.

Gas piping ***must*** have a sediment trap ahead of the heater gas controls, ***and*** a manual shut-off valve located outside the heater jacket. It is recommended that a union be installed in the gas supply piping adjacent to the heater for servicing. The gas supply pressure to the heater must not exceed 10.5 in. WC (2.59 kPa) for natural gas or 13.0 in. WC (3.2 kPa) for propane gas. A pounds-to-inches regulator must be installed to reduce the gas supply pressure if it is higher than noted above. This regulator should be placed a minimum distance of 10 times the pipe diameter upstream of the heater gas controls. Refer to **Table I** for maximum pipe lengths.

Gas Supply Connection

⚠CAUTION: The heater must be disconnected from the gas supply during any pressure testing of the gas supply system at test pressures in excess of 1/2 psi (3.45 kPa).

The heater must be isolated from the gas supply piping system by closing the upstream manual shut-off valve during any pressure testing of the gas supply piping system at test pressures equal to or greater than 1/2 psi (3.45 kPa). Relieve test pressure in the gas supply line prior to re-connecting the heater and its manual shut-off valve to the gas supply line. **FAILURE TO FOLLOW THIS PROCEDURE MAY DAMAGE THE GAS VALVE.** Over-pressurized gas valves are not covered by warranty. The heater and its gas connections shall be leak-tested before placing the appliance in operation. Use soapy water for leak test. DO NOT use an open flame.

⚠CAUTION: Do not use Teflon tape on gas line pipe thread. A pipe compound rated for use with natural and propane gases is recommended. Apply sparingly only on male pipe ends, leaving the two end threads bare.

⚠CAUTION: Support gas supply piping with hangers, not by the heater or its accessories. Make sure the gas piping is protected from physical damage and freezing, where required.

Gas Supply Pressure

A minimum of 4.0 in. WC (1.0 kPa) and a maximum of 10.5 in. WC (2.59 kPa) upstream gas pressure is required under load and no-load conditions for natural gas. A minimum of 4.0 in. WC (1.0 kPa) and a maximum of 13.0 in. WC (3.20 kPa) is required for propane gas. The gas pressure regulator(s) supplied on the heater is for low-pressure service. If upstream pressure exceeds these values, an intermediate gas pressure regulator, of the lockup type, must be installed.

When connecting additional gas utilization equipment to the gas piping system, the existing piping must be checked to determine if it has adequate capacity for the combined load.

NOTE: During normal operation, carbon dioxide should be 9.3% ± 0.2% at full fire for natural gas and 10.7% ± 0.2% for propane gas. Carbon monoxide should be less than 100 ppm at all firing rates, measured at test port, 12" (30.5 cm) above the flue collar.

⚠CAUTION: For proper operation, no more than a 30% drop in gas supply pressure from no-load to full-load conditions is acceptable. Under no circumstances should the pressure be outside the listed operational range.

Model No.	2-1/2 in. NPT		3 in. NPT		4 in. NPT	
	Nat	Pro	Nat	Pro	Nat	Pro
2503	55 (17)	135 (41)	160 (49)	400 (122)	600 (182)	--
3003	40 (12)	85 (26)	120 (37)	250 (76)	500 (152)	--
3503	30 (9)	45 (14)	80 (24)	200 (61)	400 (122)	600 (183)
4003	25 (8)	35 (11)	65 (20)	160 (49)	300 (91)	400 (122)

Natural Gas – 1,000 BTU/ft^3, 0.60 specific gravity at 0.5 in. WC pressure drop

Propane Gas – 2,500 BTU/ft^3, 1.53 specific gravity at 0.6 in. WC pressure drop

Table I. Gas Supply Piping, Max Equiv Length - ft (m)

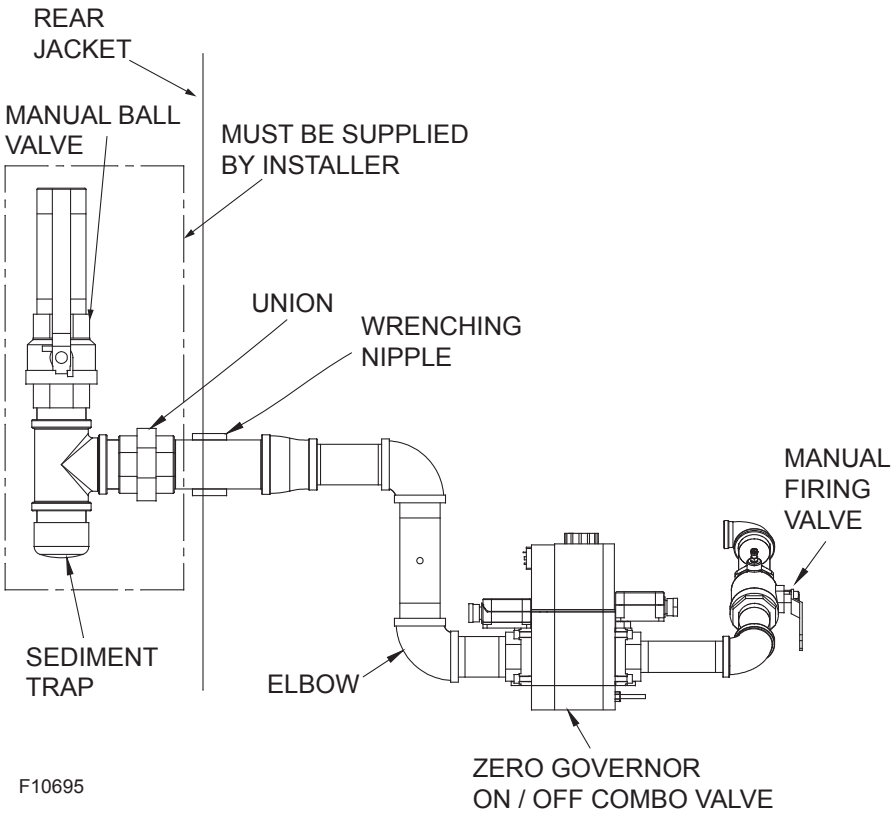

Figure 18. Gas Supply Connection

Electrical Power Connections

Installations must follow these codes:

- National Electrical Code and any other national, state, provincial or local codes or regulations having jurisdiction.
- Safety wiring must be NEC Class 1.
- Heater must be electrically grounded as required by the NEC.

The MVB heaters are wired for a 240 VAC, 1 Phase, 60 Hz power supply with an option for a 208/220V transformer. Consult the wiring diagram shipped with the heater. Before starting the heater, check to ensure proper (voltage and ampacity) to the heater and pump.

Pumps must use a separate power supply and run the power through a field-supplied contactor. Use appropriately-sized wire as defined by NEC, CSA and/or local codes. All primary wiring should be 125% of minimum rating.

If any of the original wire as supplied with the heater must be replaced, it must be replaced with 105°C wire or its equivalent.

All high-voltage wiring connections to the MVB heater are made inside the rear wiring box as shown in **Figure 19**. There are three factory-supplied pump interlock relays in the rear wiring box to provide an enable signal via dry contact (5A max) for the Boiler Pump, System Pump and Indirect DHW Pump as required for the system depending on the mode selected within the VERSA IC control system.

Model	Heater Amps	
	208VAC	240VAC
2503	14	12
3003	17.5	15
3503	20	17
4003	23	20

Table J. Heater Current Amp Draw

Field-Connected Controllers

It is strongly recommended that all individually-powered control modules and the heater should be supplied from the same power source.

NOTE: Field-supplied isolation relays should be installed when field-connected controllers are mounted more than 50 equivalent feet (15 m) (18 AWG) from heater. See wiring diagrams.

NOTE: Minimum 18 AWG, 105°C, stranded wire must be used for all low voltage (less than 30 volts) external connections to the unit. Solid conductors should not be used because they can cause excessive tension on contact points. Install conduit as appropriate. All high voltage wires must be the same size (105°C, stranded wire) as the ones on the unit or larger.

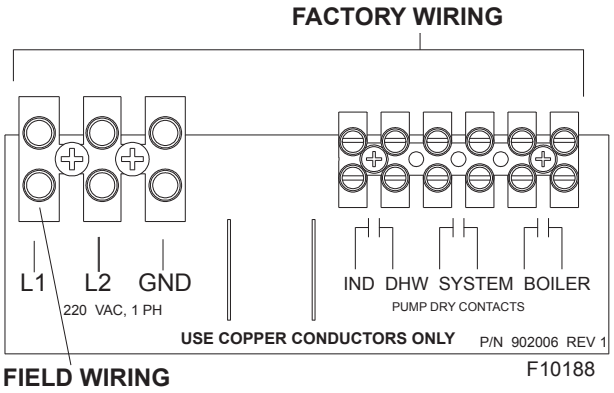

Figure 19. Wiring Electrical Connections

Check the Power Source

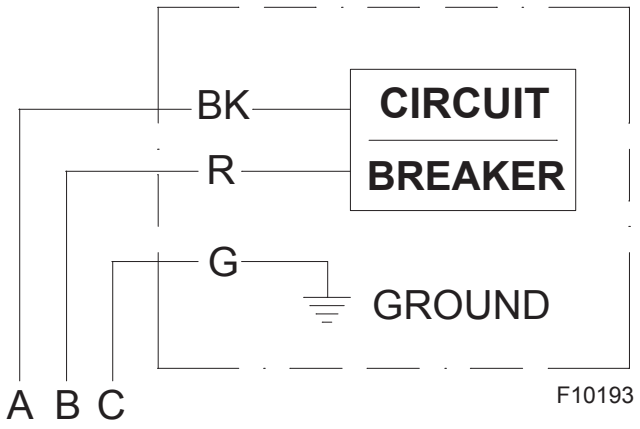

Figure 20. Wiring Connections

⚠WARNING: Using a multimeter, check the following voltages at the circuit breaker panel prior to connecting any equipment. Make sure proper polarity is followed and house ground is proven.

Check the power source:

AC = 108 VAC Minimum, 132 VAC Maximum

BC = 108 VAC Minimum, 132 VAC Maximum

AB = 216 VAC Minimum, 264 VAC Maximum

NOTE: Multi-voltage transformer is an optional feature. When unit is order with this configuration, see Figure 21 for 208V or 220V field wiring configurations.

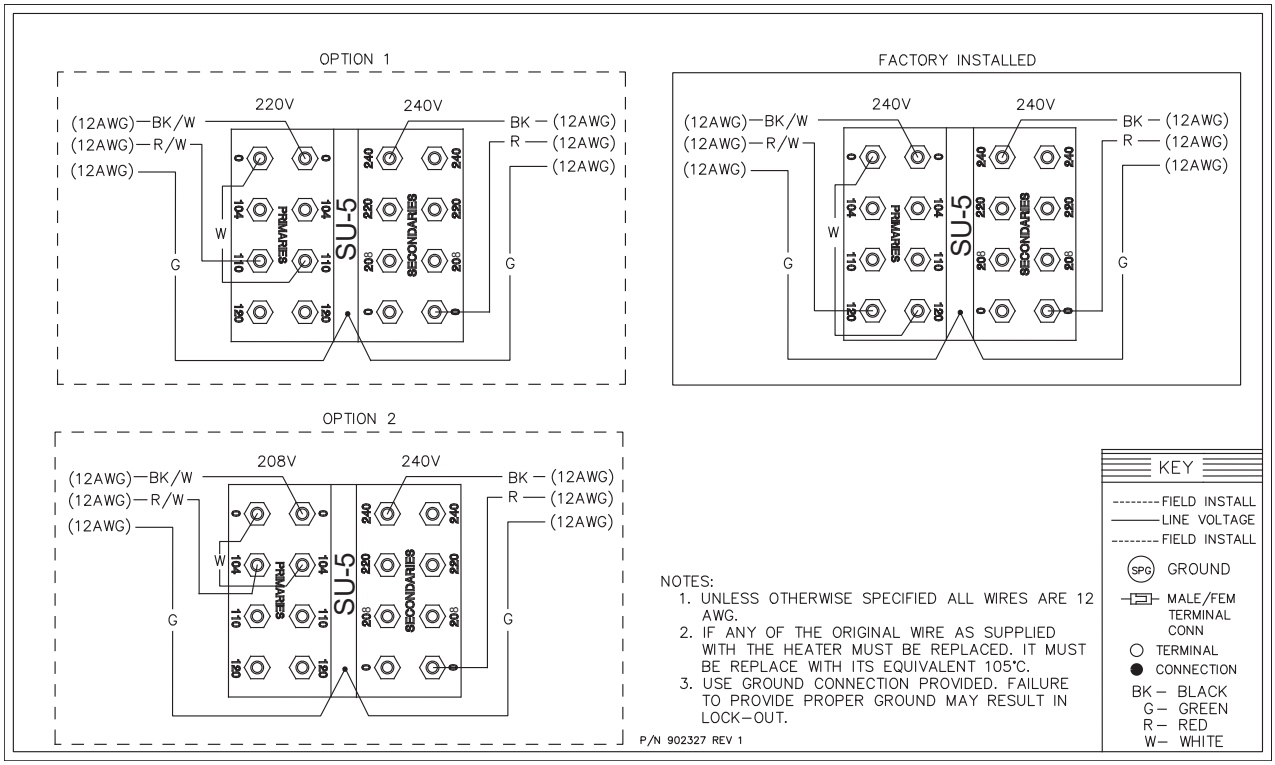

Figure 21. Wiring Diagram Transformer 240V (Factory Installed) and 208V/220V (Field Wiring)

Making the Electrical Connections

Refer to **Figure 19-22**.

1. Verify that circuit breaker is properly sized by referring to heater rating plate. A dedicated circuit breaker should be provided.

NOTE: Current draw noted on rating plate does not include pump current.

2. Turn off all power to the heater. Verify that power has been turned off by testing with a multimeter prior to working with any electrical connections or components.
3. Observe proper wire colors while making electrical connections. Many electronic controls are polarity sensitive. Components damaged by improper electrical installation are not covered by warranty.
4. Provide overload protection and a disconnect means for equipment serviceability as required by local and state code.
5. Install heater controls, thermostats, or building management systems in accordance with the applicable manufacturers' instructions.
6. Conduit should not be used as the earth ground.

NOTE: A grounding electrode conductor shall be used to connect the equipment grounding conductors, the equipment enclosures, and the grounded service conductor to the grounding electrode.

Field Wiring Connection

⚠CAUTION: Label all wires prior to disconnection when servicing controls. Wiring errors can cause improper and dangerous operation. Verify proper operation after servicing.

⚠DANGER: SHOCK HAZARD

Make sure electrical power to the heater is disconnected to avoid potential serious injury or damage to components.

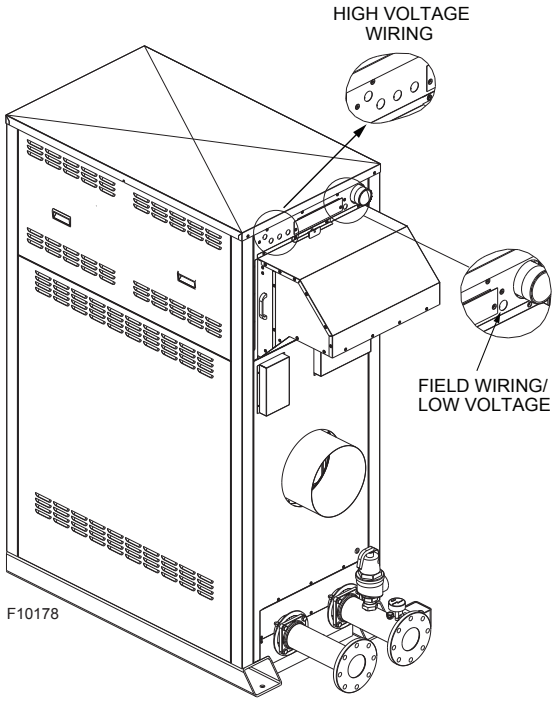

Figure 22. Wiring Location

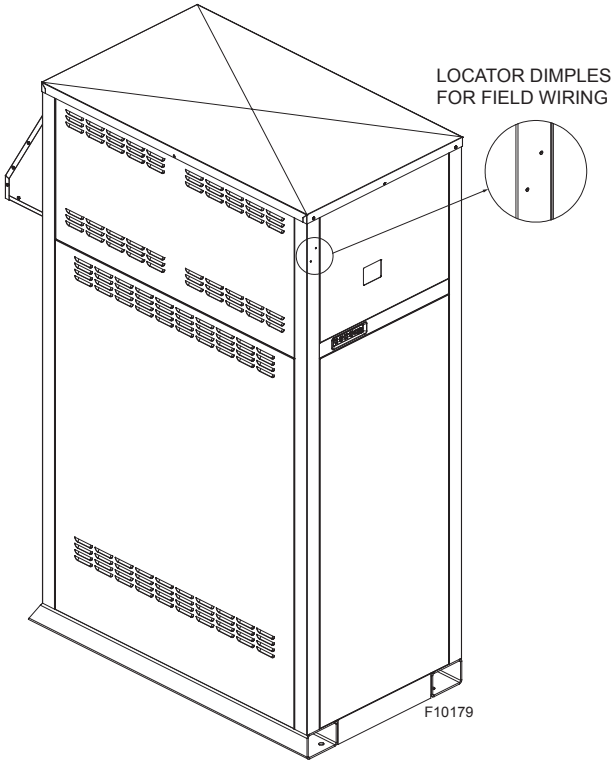

Figure 23. Locator Dimples for Optional Components

Wiring the Enable/Disable

Connect the Enable/Disable wiring to the field wiring terminals. (Refer to VERSA IC Manual (5000.72) as needed). Alternately, any dry contact closure (including a remote thermostat) across these terminals will enable the MVB unit to run. Caution should be used to ensure neither of the terminals becomes connected to ground.

Wiring the Outdoor Sensor (S4)

1. There is no connection required if an outdoor sensor is not used in this installation.
2. If using an Outdoor Sensor (option B-32), connect the sensor wires to the terminals marked OUTDOOR SENSOR. (Refer to VERSA IC Manual (5000.72) as needed.) Caution should be used to ensure neither of these terminals becomes connected to ground.
3. Use a minimum 18 AWG wire for runs of up to 150 feet (45 m).
4. Mount the outdoor sensor on an exterior surface of the building, preferably on the north side in an area that will not be affected by direct sunlight and that will be exposed to varying weather conditions.

Wiring the Indirect Sensor (S5)

1. An indirect sensor connection is not required if an indirect water heater is not used in the installation.
2. When the Indirect DHW call for heat is active, the PIM communicates this to the VERSA. The VERSA calculates the optimal operation and sends the firing rate and pump output requests to the PIM so it can activate the Indirect DHW pump and Boiler pump as needed. If an optional Indirect DHW sensor is connected, the PIM will pass this signal to the VERSA. This allows the VERSA to optimize the Indirect DHW demand to maintain the Indirect DHW setpoint. The Indirect DHW thermostat switch closure is still required when using the Indirect DHW sensor. If a VERSA is not present the PIM shall activate the Indirect DHW pump whenever the Indirect DHW call is active. The Boiler pump will also be activated based on the Indirect DHW piping configuration setting. See the VERSA IC manual (5000.72) for detailed information.
3. Connect the indirect tank sensor to the terminals marked INDIRECT DHW SENSOR (see wiring diagram). Caution should be used to ensure neither of these terminals becomes connected to ground.

NOTE: Alternately, a thermostat contact closure can be used in lieu of the sensor for indirect operation. Connect the thermostat to the terminals marked INDIRECT DHW OVERIDE.

⚠CAUTION: Sensor and control wiring must NOT be run in conduit or chases with line voltage.

Wiring the Optional 0–10 Volt Building Control Signal

1. A signal from an energy management system may be connected to the MVB boiler. This signal should be a 0-10 volt positive DC signal, and an energy management system can be used to control either

the setpoint temperature of a single MVB or a cascade configuration (refer to the VERSA IC Manual [5000.72] for details), or the firing rate of a single MVB boiler.

2. To enable this remote control function, set dip switch 5 to the UP position on the PIM. Dip switch 5 Toggles between an EMS (UP) signal or a demand signal from the VERSA (DOWN). Dip switch 2 on the PIM toggles between a Direct Drive (UP) input and a Target Temperature (DOWN) setpoint.
3. For a 4-20mA application. See the VERSA IC manual (5000.72) for detailed information.
4. Connect an Energy Management system or other auxiliary control signal to the terminals marked 0-10V (+ /-) on the field wiring terminals. (Refer to VERSA IC Manual (5000.72) as needed.) Caution should be used to ensure that the +0-10V connection does not create a short to ground.

Wiring the Cascade System Communication Bus

Refer to VERSA IC Manual (5000.72) for details on Cascade wiring and communication setup.

Cascade System Pump and Sensor Wiring

1. On the boiler designated as the Master, connect the system pump enable wiring to the terminal block at the rear of the unit. The connections are dry contacts rated for pilot duty only (5A maximum).
2. Connect the boiler pump enable wires to the terminal block at the rear of their unit. The connections are dry contacts rated for pilot duty only (5A maximum).
3. Connect the system supply sensor to terminals 6 and 7 on the field wiring strip located on the Master PIM. Refer to VERSA IC Manual (5000.72) as needed.
4. Connect the Outdoor sensor (if used) to terminals 8 and 9 on the field wiring strip located on the Master boiler. Refer to VERSA IC Manual (5000.72) as needed.
5. Connect the Enable/Disable wiring to terminals 11 and 12 on the field wiring strip located on the Master boiler. This connection must be provided through dry contacts closure. Refer to VERSA IC Manual (5000.72) as needed.

NOTE: This dry contacts closure can come from a room thermostat or a remote relay. No power of any kind should be applied to either of these terminals.

Cascade Follower Pump and Sensor Wiring

1. Once the primary boiler has been identified, additional boilers will be designated as follower boilers. Ensure DIP switch 2 on each follower VERSA is set to the OFF/Down position.
2. For each follower boiler, connect the boiler pump enable wires to the terminal block at the rear of each unit. The connections are dry contacts rated for pilot duty only (5A maximum).
3. The system and DHW pump outputs are not used in the Cascade Follower configuration.

NOTE: Refer to the VERSA IC Manual [5000.72] for cascade operation and configuration details.

Modbus BMS Communication

The VERSA IC control is equipped as standard with a communications port for connectivity to building automation via Modbus protocol. See the VERSA IC manual (5000.72) for detailed information.

Alarm Connection

An alarm annunciator or light may be connected to the alarm contacts on the field wiring terminal strip. The Alarm Contacts are 3A rated dry contacts on a normally-open relay that close during fault or lockout conditions, and the maximum voltage across the contacts is 30 VAC or 30 VDC. Refer to VERSA IC Manual (5000.72) as needed.

In a cascade system, the alarm output of the master boiler will be active if either the master boiler or follower(s) have a lockout condition. This feature can be enabled or disabled, refer to VERSA IC Manual (5000.72) for further details on "Cascaded Alarm".

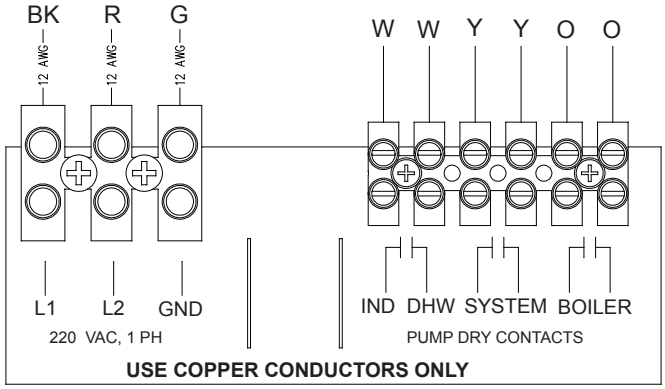

Figure 24. MVB Cascade Master Pumps

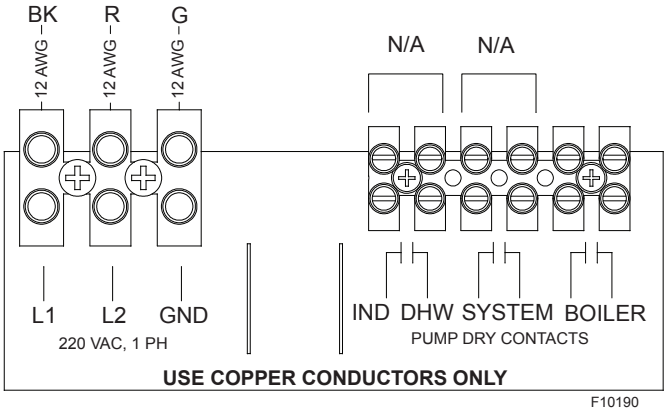

Figure 25. VERSA Follower

Venting

General

⚠CAUTION: Proper installation of flue venting is critical for the safe and efficient operation of the heater.

Appliance Categories

Heaters are divided into four categories based on the pressure produced in the exhaust and the likelihood of condensate production in the vent.

Category I – A heater which operates with a non-positive vent static pressure and with a vent gas temperature that avoids excessive condensate production in the vent.

Category II – A heater which operates with a non-positive vent static pressure and with a vent gas temperature that may cause excessive condensate production in the vent.

Category III – A heater which operates with a positive vent pressure and with a vent gas temperature that avoids excessive condensate production in the vent.

Category IV – A heater which operates with a positive vent pressure and with a vent gas temperature that may cause excessive condensate production in the vent.

See **Table K** for appliance category requirements.

NOTE: For additional information on appliance categorization, see appropriate ANSI Z21 Standard and the NFGC (U.S.), or B149 (Canada), or applicable provisions of local building codes.

⚠CAUTION: Condensate drains for the vent piping are required for installations of the MVB. Follow vent manufacturer instructions for installation and location of condensate drains in the vent. Condensate drain must be primed with water to prevent gas flue leak and must be routed to an appropriate container for neutralization before disposal, as required by local codes. See page 35.

⚠WARNING: Contact the manufacturer of the vent material if there is any question about the appliance categorization and suitability of a vent material for application on a Category IV vent system. Using improper venting materials can result in personal injury, death or property damage.

⚠WARNING: Do not use foam core or cellular core PVC/CPVC pipe for venting.

⚠CAUTION: Vent piping is hot. Raypak recommends the use of double wall or insulated wall pipe to prevent personal injury.

NOTE: Ensure that clearances are maintained per Table C, D and E.

Use only the special gas vent pipes listed for use with Category IV gas burning heaters, such as the AL29-4C stainless steel vents offered by Heat Fab Inc. (800-772-0739), Protech System, Inc. (800-766-3473), Z-Flex (800-654-5600) or American Metal Products (800-423-4270). Pipe joints must be positively sealed. Follow the vent manufacturer's installation instructions carefully.

Extractors, Draft. Inducers, and Motorized Flue Dampers

When extractors or inducers are used in the venting system, they must be interlocked with each connected appliance, to ensure proper operation. If individual motorized dampers are used, they must be interlocked to their respective appliance. See **"Field Wiring Connection" on page 25** of this manual for proper wiring instructions, using Fan/ Damper dry contacts and external interlock.

Support of Vent Stack

The weight of the vent stack or chimney must not rest on the heater vent connection. Support must be provided in compliance with applicable codes. The vent should also be installed to maintain proper clearances from combustible materials. Use insulated vent pipe spacers where the vent passes through combustible roofs and walls.

Vent Terminal Location

NOTE: During winter months check the vent cap and make sure no blockage occurs from build-up of snow or ice.

1. Condensate can freeze on the vent cap. Frozen condensate on the vent cap can result in a blocked flue condition.
2. Give special attention to the location of the vent termination to avoid possibility of property damage or personal injury.
3. Gases may form a white vapor plume in winter. The plume could obstruct a window view if the termination is installed near windows.
4. Prevailing winds, in combination with below-freezing temperatures, can cause freezing of condensate and water/ice build-up on buildings, plants or roofs.
5. The bottom of the vent terminal and the air intake shall be located at least 12" (305 mm) above grade, including normal snow line.
6. Un-insulated single-wall Category IV metal vent pipe shall not be used outdoors in cold climates for venting gas-fired equipment without insulation.
7. Through-the-wall (sidewall) vents for Category IV appliances shall not terminate over public walkways or over an area where condensate or vapor could create a nuisance or hazard or could be detrimental to the operation of regulators, relief valves, or other equipment.

8. Locate and guard vent termination to prevent accidental contact by people or pets.
9. DO NOT terminate vent in window well, stairwell, alcove, courtyard or other recessed area.
10. DO NOT terminate above any door, window, or gravity air intake. Condensate can freeze, causing ice formations.
11. Locate or guard vent to prevent condensate from damaging exterior finishes. Use a rust-resistant sheet metal backing plate against brick or masonry surfaces.
12. DO NOT extend exposed vent pipe outside of building beyond the minimum distance required for the vent termination. Condensate could freeze and block vent pipe.

U.S. Installations

Refer to the latest edition of the U.S. National Fuel Gas Code.

Vent termination requirements are as follows:

1. Vent must terminate at least 4 ft. (1.2 m) below, 4 ft. (1.2 m) horizontally from or 1 ft. (0.3 m) above any door, window or gravity air inlet to the building.
2. The vent must not be less than 7 ft. (2.1 m) above grade when located adjacent to public walkways.
3. Terminate vent at least 3 ft. (0.9 m) above any forced air inlet located within 10 ft. (3 m).
4. Vent must terminate at least 4 ft. (1.2 m) horizontally, and in no case above or below unless 4 ft. (1.2 m) horizontal distance is maintained, from electric meters, gas meters, regulators, and relief equipment.
5. Terminate vent at least 6 ft. (1.8 m) away from adjacent walls.
6. DO NOT terminate vent closer than 5 ft. (1.5 m) below roof overhang.
7. The vent terminal requires a 12 in. (0.3 m) vent terminal clearance from the wall.
8. Terminate vent at least 1 ft. (0.3 m) above grade, including normal snow line.
9. Multiple direct vent installations require a 4 ft. (1.2 m) clearance between the ends of vent caps located on the same horizontal plane.

⚠WARNING: The Commonwealth of Massachusetts requires that sidewall vented heaters, installed in every dwelling, building or structure used in whole or in part for residential purposes, be installed using special provisions as outlined on page 55 of this manual.

Canadian Installations

Refer to latest edition of the B149 Installation Code.

A vent shall not terminate:

1. Directly above a paved sidewalk or driveway which is located between two single-family dwellings and serves both dwellings.
2. Less than 7 ft. (2.13 m) above a paved sidewalk or paved driveway located on public property.
3. Within 6 ft. (1.8 m) of a mechanical air supply inlet to any building.
4. Above a meter/regulator assembly within 3 ft. (915 mm) horizontally of the vertical centre-line of the regulator.
5. Within 6 ft. (1.8 m) of any gas service regulator vent outlet.
6. Less than 1 ft. (305 mm) above grade level.
7. Within 3 ft. (915 mm) of a window or door which can be opened in any building, any non-mechanical air supply inlet to any building or the combustion air inlet of any other appliance.
8. Underneath a verandah, porch or deck, unless the verandah, porch or deck is fully open on a mini-mum of two sides beneath the floor, and the distance between the top of the vent termination and the underside of the verandah, porch or deck is greater than 1 ft. (305 mm).

Certified Materials	Exhaust Configuration	Heater Venting Category	Combustion Air Supply	Combustion Air Inlet Material
Stainless Steel UL listed	Vertical Venting	IV	From Inside Building (Non-Direct Venting)	
	Horizontal Through-the-Wall Venting			
	Vertical Venting		From Outside Building (Direct Venting)	Galvanized Steel PVC ABS CPVC
	Horizontal Through-the-Wall Venting			

Table K. Venting Category Requirements

Venting Installation Tips

Support piping:

- horizontal runs—at least every 5 ft. (1.5 m)
- vertical runs—use braces
- under or near elbows

⚠WARNING: Examine the venting system at least once a year. Check all joints and vent pipe connections for tightness, corrosion or deterioration.

Venting Configurations

For heaters connected to gas vents or chimneys, vent installations shall be in accordance with the NFGC (U.S.), or B149 (Canada), or applicable provisions of local building codes.

Vertical Venting (Category IV)

⚠CAUTION: This venting system requires the installation of a condensate drain in the vent piping per the vent manufacturer's instructions. Failure to install a condensate drain in the venting system will void all warranties on this heater.

Installation

The maximum and minimum venting length for this Category IV appliance shall be determined per the NFGC (U.S.) or B149 (Canada).

The diameter of the vent flue pipe should be sized according to the NFGC (U.S.) and Appendix B of B149 (Canada). The minimum flue pipe diameter for conventional venting using Category IV, stainless steel UL-listed vent is: 10" (254 mm) for Models 2503-3003; and 12" (305 mm) for Models 3503-4003.

The connection from the appliance vent to the stack must be as direct as possible and shall be the same diameter as the vent outlet. The horizontal breaching of a vent must have an upward slope of not less than 1/4 inch per linear foot from the heater to the vent terminal. The horizontal portions of the vent shall also be supported for the design and weight of the material employed to maintain clearances and to prevent physical damage or separation of joints.

NOTE: A vent adapter (field-supplied) may be required to connect the Category IV vent to the heater.

Termination

The vent terminal should be vertical and should terminate outside the building at least 2 ft. (0.6 m) above the highest point of the roof that is within 8 ft. (2.4 m) for models 2503 and 3003 and 10 ft. (3 m) for models 3503 and 4003. The vent cap should have a minimum clearance of 4 ft. (1.2 m) horizontally from and in no case above or below (unless a 4 ft. (1.2 m) horizontal distance is maintained) electric meters, gas meters, regulators and relief equipment.

The distance of the vent terminal from adjacent public walkways, adjacent buildings, open windows and building openings must be consistent with the NFGC (U.S.). Gas vents supported only by flashing and extended above the roof more than 5 ft. (1.5 m) should be securely guyed or braced to withstand snow and wind loads.

Common Venting

The NFGC does not address sizing guidelines for the common venting of multiple Category IV heaters. This is covered in the NFGC under "Engineered Vent Systems". **Table M** provides boiler discharge vent pressures at vent pressure switch and volumes of flue products at full fire for the calculation of appropriate vent and extractor sizing for common venting.

⚠CAUTION: A listed vent cap terminal suitable for connection to the Cat IV vent materials, adequately sized, must be used to evacuate the flue products from the building.

Model No.	Certified Vent Material*	Vent Size in. (mm)	Vent Length** ft. (m)		Combustion Air Intake Pipe Material	Air Inlet Max Length** ft. (m)	
			Min.	Max.		10" Ø	12" Ø
2503	Stainless Steel Category IV (UL listed)	10 (254 mm)	5 (1.5 m)	100 (30 m)	Galvanized Steel, PVC, ABS, CPVC	100 (30 m)	N/A
3003							
3503		12 (305 mm)				N/A	100 (30 m)
4003							

* Special vent materials are still required.
** Subtract 10 ft. (3 m) per elbow. Max. 4 elbows.

Table L. Category IV Vertical Venting

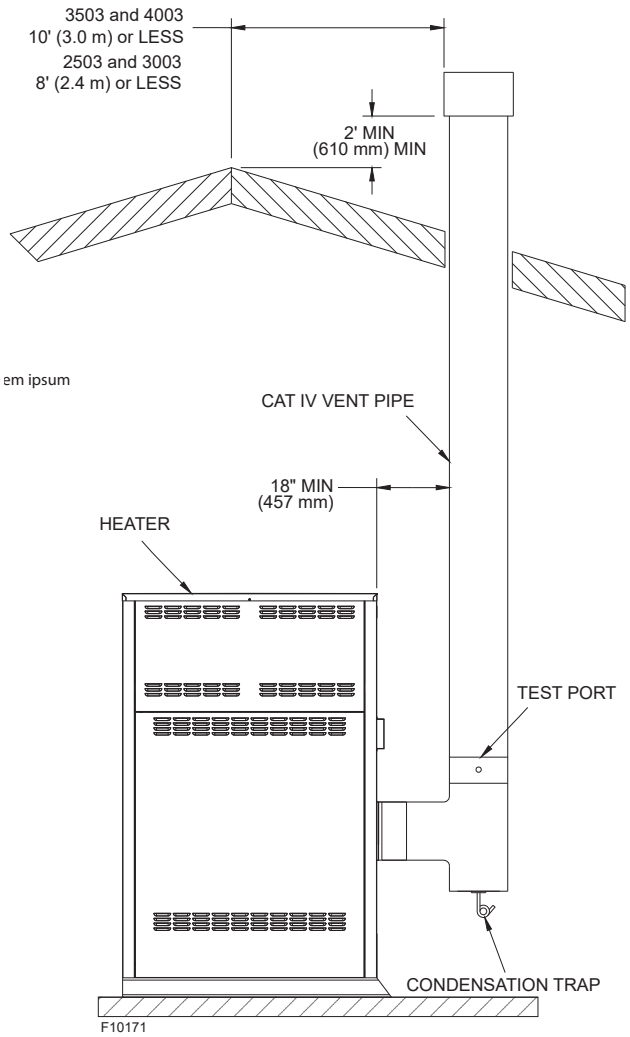

Figure 26. Vertical Venting

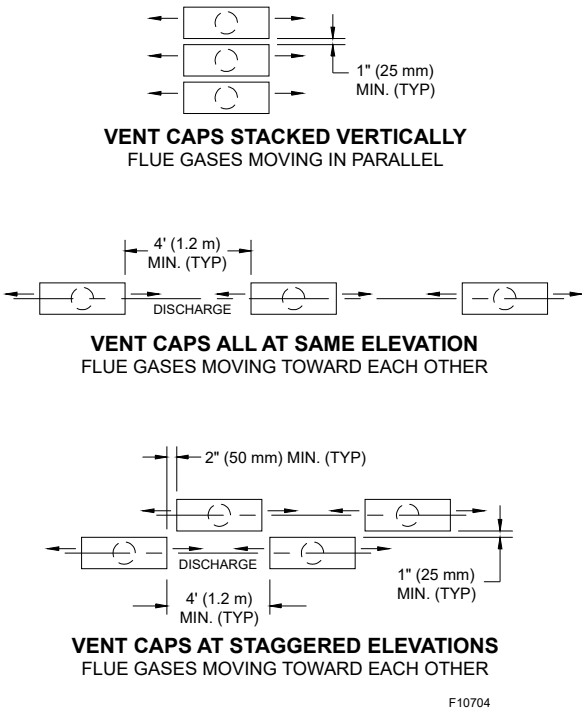

Figure 27. Vent Cap Configurations

⚠WARNING: Vent connectors serving any other appliances shall not be connected into any portion of mechanical draft. systems operating under a positive pressure. If an MVB heater is installed to replace an existing heater, the vent system MUST be verified to be of the correct size and of Category IV UL Listed stainless steel vent material construction. If it is NOT, it MUST be replaced.

NOTE: For extractor sizing, typical CO2 levels are 9.3% for natural gas and 10.7% for propane gas and flue temperature of 350°F, at 100% firing rate, measured at a test port, 12" (0.3 m) above the flue collar.

Model No.	Vent Size in. (mm)	Vent Pressure (in. WC)	Volume of Flue Products (CFM)
2503	10 (254)	0.2	800
3003		0.3	960
3503	12 (305)	0.2	1120
4003		0.3	1280

* NOTE: Data for 100% firing rate.

Table M. Typical Vent Pressure and Volume of Flue Products

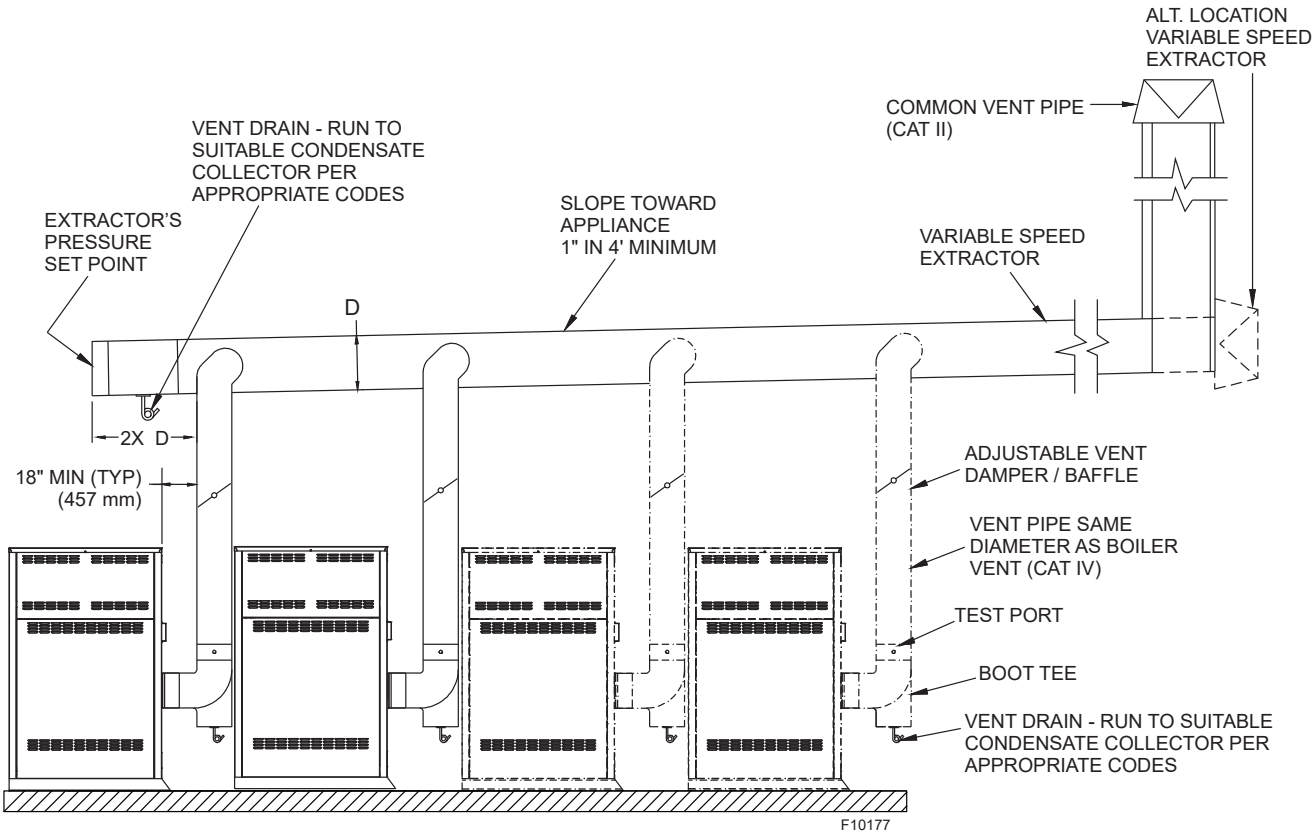

Figure 28. Typical Common Venting

Horizontal Through-the-Wall and Direct Venting (Category IV)

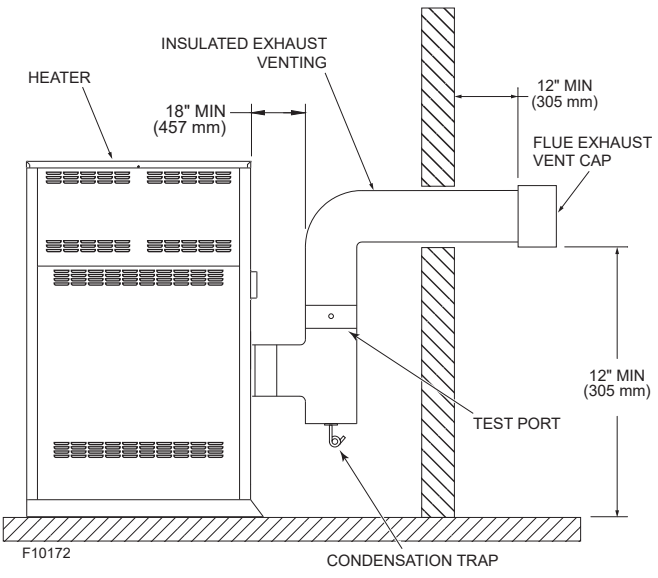

Figure 29. Horizontal Through-the-Wall Venting

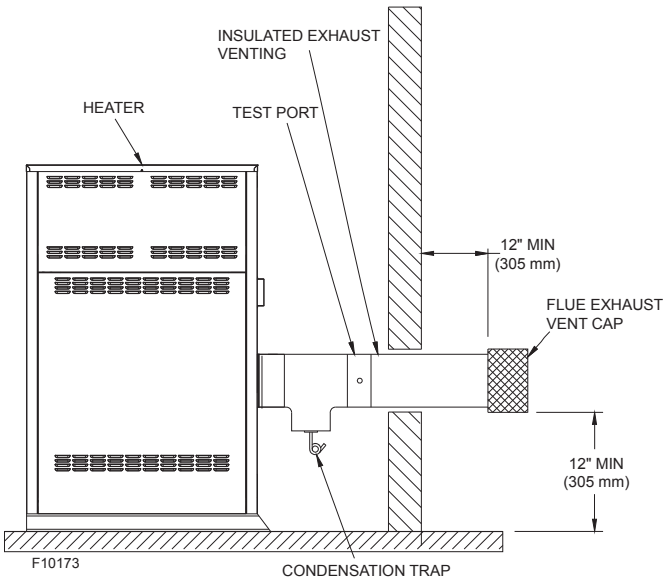

Figure 30. Alt. Horizontal Through-the-Wall Venting

NOTE: While a drain connection is required in the vent of all MVB installations, the drain can be accomplished in several different ways. The figures in this manual show the drain in a vent tee, however, this can also be accomplished using an inline collector for condensing stacks or an inline vertical or horizontal collector available from several of the listed vent manufacturers.

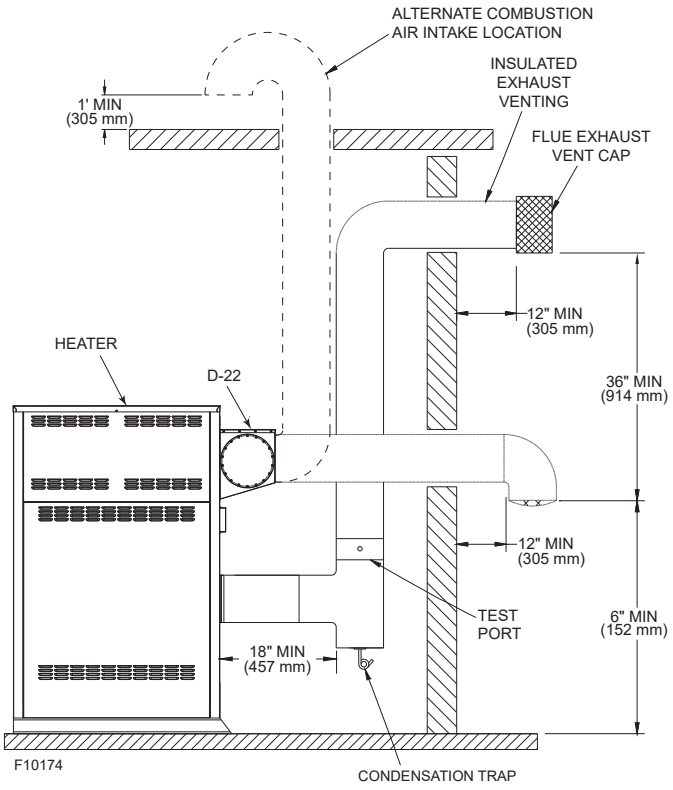

Figure 31. Horizontal Through-the-Wall Direct Venting

⚠CAUTION: This venting system requires the installation of a condensate drain in the vent piping per the vent manufacturer's instructions. Failure to install a condensate drain in the venting system will void all warranties on this heater. See page 35.

Installation

These installations utilize the heater-mounted blower to vent the combustion products to the outdoors. Combustion air is taken from inside the room and the vent is installed horizontally through the wall to the outdoors. Adequate combustion and ventilation air must be supplied to the equipment room in accordance with the NFGC (U.S.) or B149 (Canada).

The total length of the horizontal through-the-wall flue system should not exceed 100 equivalent ft. (30 m) in length. If horizontal run exceeds 100 equivalent ft. (30 m), an appropriately-sized variable-speed extractor must be used. Each elbow used is equal to 10 ft. (3 m) of straight pipe. This will allow installation in one of the four following arrangements:

- 100 ft. (30 m) of straight flue pipe
- 90 ft. (27.4 m) of straight flue pipe and one elbow
- 80 ft. (24.4 m) of straight flue pipe and two elbows
- 70 ft. (21.3 m) of straight pipe and three elbows

The vent cap is not considered in the overall length of the venting system.

The vent must be installed to prevent flue gas leakage. Care must be taken during assembly to ensure that all joints are sealed properly and are airtight. The vent must be installed to prevent the potential accumulation of condensate in the vent pipes. It is required that:

1. The vent must be installed with a condensate drain located in proximity to the heater as directed by the vent manufacturer.
2. The vent must be installed with a slight upward slope of not less than 1/4 inch per foot (21 mm per linear meter) of horizontal run to the vent terminal.
3. The vent must be insulated through the length of the horizontal run.

Termination

The flue direct vent cap MUST be mounted on the exterior of the building. The direct vent cap cannot be installed in a well or below grade. The direct vent cap must be installed at least 1 ft. (0.3 m) above ground level and above normal snow levels. The Raypak-approved stainless steel flue direct vent cap must be used (option D-15). The vent terminal must be located NO CLOSER than 12" (0.3 m) off the wall.

⚠WARNING: No substitutions of flue pipe or vent cap material are allowed. Such substitutions would jeopardize the safety and health of inhabitants.

Model No.	Certified Vent Material	Vent Size in. (mm)	Maximum Horizontal Vent Length* ft. (m)	Combustion Air Intake Pipe Material	Air Inlet Max. Length* ft. (m)	
					10" Ø	12" Ø
2503	Category IV (UL listed - SS)	10 (254 mm)	100 (30 m)	Galvanized Steel, PVC, ABS, CPVC	100 (30 m)	
3003						
3503		12 (305 mm)				100 (30 m)
4003						

* Subtract 10 ft. (3 m) per elbow. Max. 4 elbows.

Table N. Category IV Horizontal Vent & Horizontal Direct Vent

Direct Vent - Vertical

Installation

These installations utilize the heater-mounted blower to draw combustion air from outdoors and vent combustion products to the outdoors.

The total length of air supply pipe cannot exceed the distances listed in **Table L** and **Table N**. Each elbow used is equal to 10 ft. (3 m) of straight pipe. This will allow installation in any arrangement that does not exceed the lengths shown in **Table L** and **Table N**.

The vent cap is not considered in the overall length of the venting system.

⚠CAUTION: This venting system requires the installation of a condensate drain in the vent piping per the vent manufacturer's instructions. Failure to install a condensate drain in the venting system will void all warranties on this heater. See page 35.

Care must be taken during assembly that all joints are sealed properly and are airtight.

The vent must be installed to prevent the potential accumulation of condensate in the vent pipes. It is required that:

1. The vent must be installed with a condensate drain located in proximity to the heater as directed by the vent manufacturer.
2. The vent must be installed with a slight upward slope of not more than 1/4 inch per foot (21 mm per meter) of horizontal run to the vent terminal.
3. The vent must be insulated through the length of the horizontal run.

Termination

The vent cap MUST be mounted on the exterior of the building. The vent cap cannot be installed in a well or below grade. The vent cap must be installed at least 1 ft. (0.3 m) above ground level and above normal snow levels.

The vent cap MUST NOT be installed with any combustion air inlet directly above a vent cap. This vertical spacing would allow the flue products from the vent cap to be pulled into the combustion air intake installed above.

This type of installation can cause non-warrantable problems with components and poor operation of the heater due to the recirculation of flue products. Multiple vent caps installed in the same horizontal plane must have a 4 ft. (1.2 m) clearance from the side of one vent cap to the side of the adjacent vent cap(s).

Combustion air supplied from outdoors must be free of particulate and chemical contaminants. To avoid a blocked flue condition, keep the vent cap clear of snow, ice, leaves, debris, etc.

The stainless steel flue direct vent cap must be furnished by the heater manufacturer in accordance with its listing (sales order option D-15).

⚠WARNING: No substitutions of flue pipe or vent cap material are allowed. Such substitutions would jeopardize the safety and health of inhabitants.

Outdoor Installation

Units installed outdoors must be vented with listed vent material per the following instructions and installed with the optional factory-supplied outdoor vent kit. A special vent cap and air intake hood are provided in accordance with CSA requirements. These must be installed directly on the vent pipe as illustrated in **Figure 33**.

Care must be taken when locating the heater outdoors, because the flue gases discharged from the vent cap can condense as they leave the cap. Improper location can result in damage to adjacent structures or building finish. For maximum efficiency and safety, the following precautions must be observed:

⚠CAUTION: Use of double-wall vent pipe is recommended to minimize the risk of personal injury.

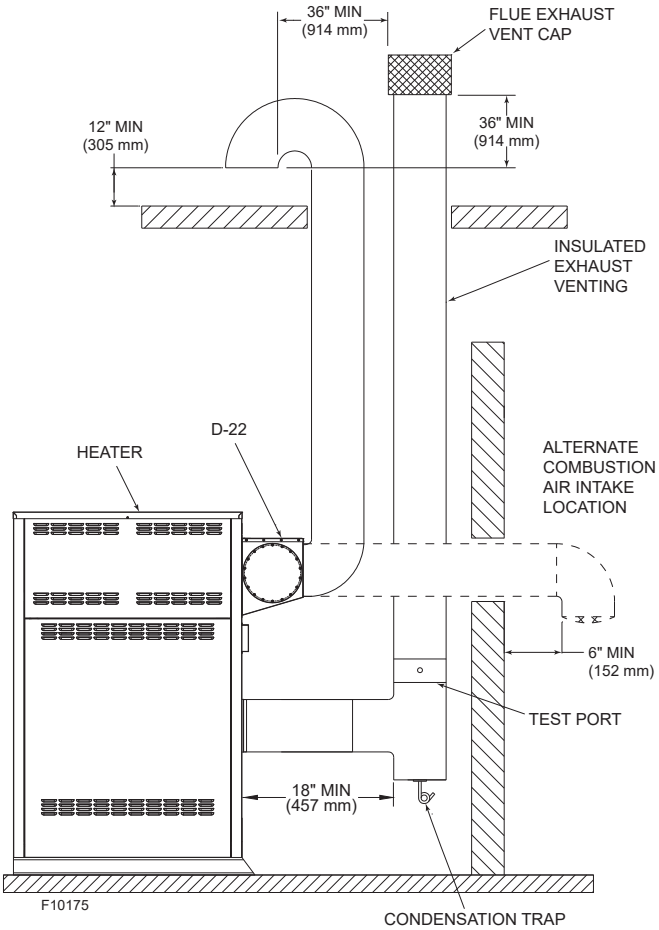

Figure 32. Direct Vent - Vertical

1. Outdoor models must be installed outdoors and must use the outdoor vent cap and air intake hood available from the manufacturer (sales order option D-11).
2. Periodically check venting system. The heater's venting areas must never be obstructed in any way and minimum clearances must be observed to prevent restriction of combustion and ventilation air. Keep area clear and free of combustible and flammable materials.
3. Do not locate adjacent to any window, door, walkway, or gravity air intake. The vent must be located a minimum of 4 ft. (1.2 m) horizontally from such areas.
4. Install above grade level and above normal snow levels.
5. Vent terminal must be at least 3 ft. (0.9 m) above any forced air inlet located within 10 ft. (3 m).
6. Adjacent brick or masonry surfaces must be protected with a rust-resistant sheet metal plate.

NOTE: The vent cap and air intake hood must be furnished by the heater manufacturer in accordance with its listing (sales order option D-11).

NOTE: Condensate can freeze on the vent cap. Frozen condensate on the vent cap can result in a blocked flue condition.

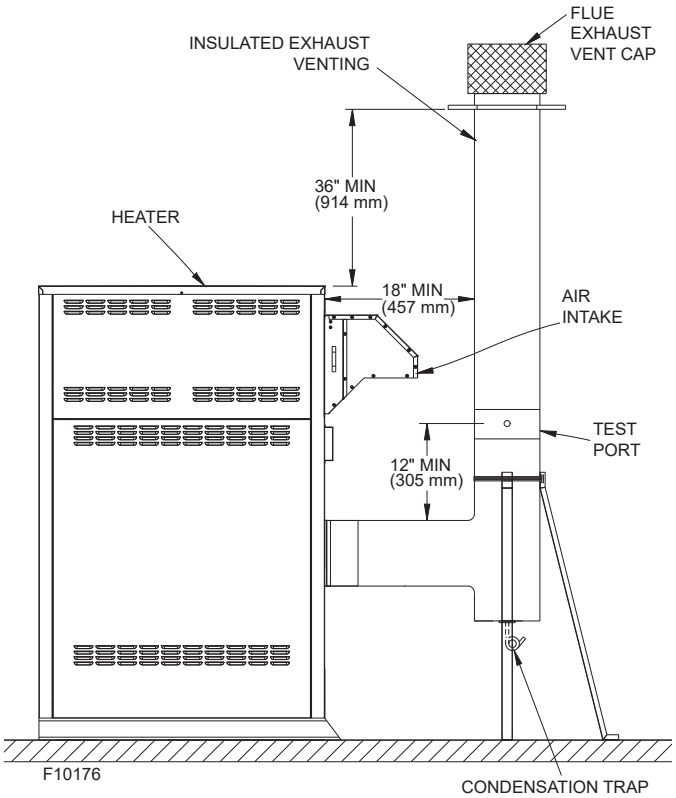

Figure 33. Outdoor Venting

Condensate Management

The condensate must be drained properly to protect the appliance. The condensate from the boiler vent system is acidic. Its pH is between 3.2 and 4.5. Raypak recommends treating the condensate with a condensate treatment kit (sales option Z-12).

The treatment kit is connected to the vent system drain to raise the pH level of the condensate. The kit may be added to avoid long-term damage to the drainage system and to meet local code requirements. The pH of the effluent entering a sanitary drain must be 5.0 or higher.

Vent pipe condensate drains are required for installation of the category IV MVB. Follow vent manufacturer instructions for location of condensate drains in the vent.

The treatment kit must be sized to handle the condensate generated by the appliance vent. The possible max volume of condensate produced is 1 GPH per 100,000 BTUH input. Design the drain system accordingly.

⚠CAUTION: In general, the condensate piping from the vent system must have a downward slope of 1/4" per horizontal foot (21 mm per horizontal meter). Condensate drain traps must be primed with water to prevent flue gas leaks.

Treatment systems should be checked at least once per year, and the media should be replenished as necessary. Follow the manufacturer's instructions for the installation of the treatment kit and condensate drains.

Freeze Protection

To enable freeze protection, DIP switch position 7 (on the PIM) must be turned on (UP position). This is the default position.

If the water temperature drops below 45˚F (7°C) on the Outlet or Inlet sensors, the Boiler pump is enabled. The pump is turned off when both the Inlet and Outlet temperatures rise above 50˚F (10°C).

If either the Outlet or Inlet temperature drops below 38°F (3°C), the VERSA starts the burner at the minimum firing rate. The burner cycle will terminate when both the Inlet and Outlet temperatures rise above 42°F (6°C).

5. CONTROLS

⚠WARNING: Installation, adjustment and service of heater controls, including timing of various operating functions, must be performed by a qualified installer, service agency or the gas supplier. Failure to do so may result in control damage, heater malfunction, property damage, personal injury, or death.

⚠WARNING: Turn off the power to the heater before installation, adjustment or service of any heater controls. Failure to do so may result in board damage, heater malfunction, property damage, personal injury, or death.

⚠CAUTION: This appliance has provisions to be connected to more than one supply source. To reduce the risk of electric shock, disconnect all such connections before servicing.

⚠CAUTION: Risk of electric shock: More than one disconnect switch may be required to de-energize the equipment before servicing.

Ignition Control Functions

When there is a call for heat, and all safeties are closed, then the combustion air blower starts to purge air from the combustion chamber. After the pre-purge, the igniter is energized. The standard ignition module will lock-out after failing to light 3 times during a call for heat. To reset the lock-out, press and release the **RESET** button located on the user interface. The control will automatically reset after 1 hour. When in lock-out the control will run the blower through a post-purge cycle.

The single-try ignition module (part of the CSD-1 option) will attempt to light only one time before lockout occurs. To reset the lock-out, press and release the **RESET** button located on the user interface.

Turning off the power to the heater WILL NOT reset the single-try ignition module.

NOTE: Ignition modules are common for all model sizes. However, model-specific operating parameters are defined by their respective ID cards.

High Limit - Manual Reset

This heater is equipped with a fixed-setting manual reset high limit temperature device as standard. It may also have an additional optional adjustable manual reset high temperature device.

The optional manual reset high limit is located inside the cabinet on the upper left corner post. Access the limit by hinging the control box open to view and make adjustments.

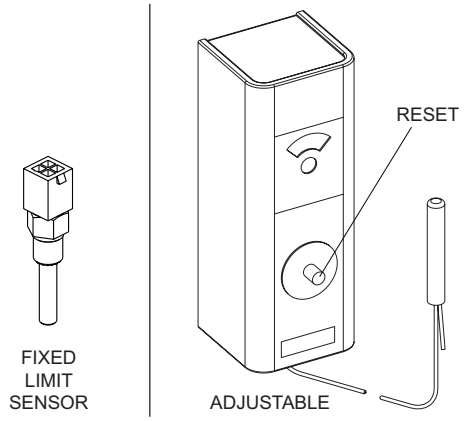

Figure 34. High Limit (Manual Reset)

The fixed-setting manual reset high limit is built into the PIM, it utilizes a dual element sensor located on the heater outlet. To reset a fixed high limit lock-out, press and release the RESET button located on the user interface. To reset the adjustable high limit, press and release the RED reset button on the limit.

High Limit - Auto Reset (Optional)

This heater may be equipped with an optional adjust-able auto, or reset high limit temperature device.

The adjustable auto reset high limit is located inside the cabinet on the upper left corner post. Access the limit by hinging the control box open to view and make adjustments. Adjust the setting to approx. 20°F (11°C) above desired outlet temperature.

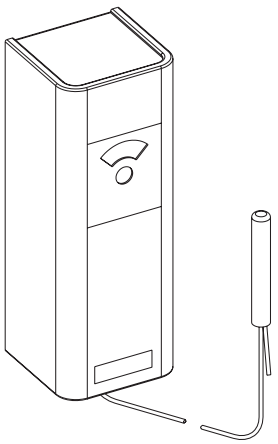

Figure 35. Adjustable High Limit (Auto Reset)

Flow Switch

This standard, dual-purpose control, mounted and wired in series with the main gas valve, shuts off heater in case of pump failure or low water flow.

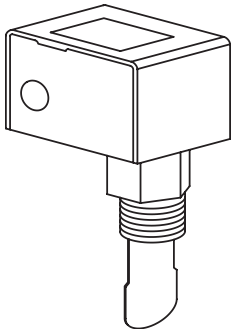

Figure 36. Flow Switch

Low Water Cut-Off (Optional)

The low water cut-off (option F-10) automatically shuts down the burner whenever water level drops below the level of the sensing probe. A 5-second time delay prevents premature lockout due to temporary conditions such as power fluctuations or air pockets.

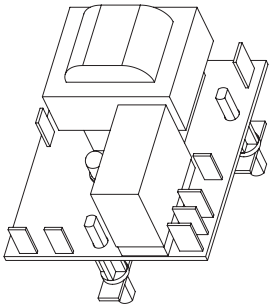

Figure 37. Low Water Cut-Off

High and Low Gas Pressure Switches

The low gas pressure switch (option S-1) mounts upstream of the gas valve (on the inlet flange to the gas valve) and is accessible through the removable access panels on the side or front of the heater to reset the gas pressure switch, as necessary. It is used to ensure that sufficient gas pressure is present for proper valve/regulator performance. The low gas pressure switch automatically shuts down the heater if gas supply drops below the factory setting of 3.0 in. WC (0.74 kPa) for natural gas or propane gas.

The high gas pressure switch is standard, and is mounted downstream of the gas valve with a factory setting of 3.0 in. WC (0.74 kPa). If the gas pressure regulator in the valve fails, the high gas pressure switch automatically shuts down the burner.

Operation of either the high or low gas pressure switch will turn on an LED inside the switch housing. Push the top of the plastic switch housing as shown in **Figure 38** to reset a tripped pressure switch. The LED will go out when the switch is reset. These safety devices can emit small amounts of fuel gas, and must be piped to a safe discharge location per local code requirements.

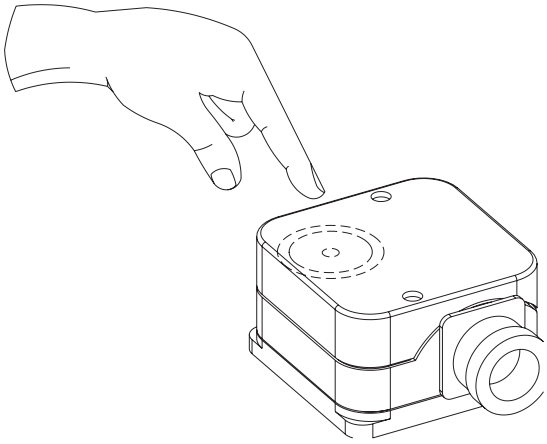

Figure 38. High/Low Gas Pressure Switch

Blocked Vent Switch

This heater is equipped with a blocked vent pressure switch to prevent the operation of the heater when too much of the vent is blocked. This switch is located on the right side of the heater near the right rear corner.

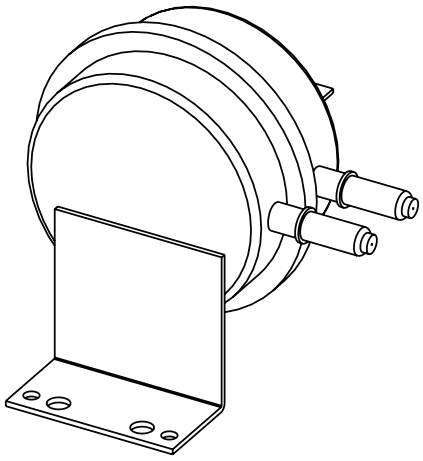

Figure 39. Blocked Vent Switch

User Interface

The touchscreen user interface uses a high definition 7" capacitive screen. It includes an extensive graphical library used to represent different pipe configurations, error location, and operation of the unit. The touchscreen has the same basic menu distribution as the original LCD Display, when pressing the MENU button the menu bar becomes visible at the bottom of the screen allowing navigation through four additional sub-menus (VIEW, ADJUST, BOILER, and TOOLS).

For detailed descriptions of the various screens, page flows and basic instructions, consult the Touchscreen Quick Start User Guide (5000.74) and VERSA IC manual (5000.72).

If your unit has Raymote installed, refer to the Raymote installation and operation manual (5000.721).

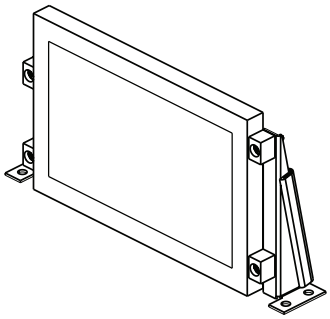

Figure 40. User Interface

Adjusting the Setpoint

Use the MENU button to open the menu options, select the ADJUST menu, go to system settings page. Once in the system settings screen use the setpoint item. Adjust the setpoint using the UP and DOWN arrow.

After making the setpoint selection press SET button to apply the changes (a confirmation bar will turn green showing that value has been applied). Minimum is 50°F (10°C), the maximum is set by the PIM. The default value is 180°F (82°C) for H models and 125°F (52°C) for WH models.

View Menu

The VIEW menu is the default menu. It displays sensor temperatures, the modulation rate of the blower, heater cascade status, pump operation and CFH information. Some of the items displayed are mode specific and are only observable when its corresponding mode is active.

Menu - Initial Adjustment

To change settings on the touchscreen, press MENU icon, Adjust icon, System settings, System menu to open Adjust Settings menu. The ADJUST menu allows the installer to make adjustments to items shown in **Table O**.

Refer to the VERSA IC manual (5000.72) for detailed setup instructions.

Item	Application	Description
OUTDOOR	H MODE 1, 2, 3	Outdoor air temperature, available when TARGET = RSET in ADJUST menu
Boil Target	H MODE 1, 2, 3	Current target temperature, available when Target = SETP in the ADJUST menu (default), and (EMS / MODB)
SUPPLY	H MODE 1, 2, 3	Current system supply temperature
Boil OUTLET	All	Current boiler outlet temperature
Boil INLET	All	Current boiler inlet temperature
Boil ΔT	All	Current temperature difference between boiler outlet and boiler inlet
FOLLOWERS	Cascade Master	Number of followers on Cascade
DHW SUPPLY	H MODE 2, 3	Current indirect DHW supply temperature, requires IND Sensor = ON in ADJUST menu
TANK DHW	WH	Current tank temperature
BOILER STATUS	All	IDLE, PREP, IGN, MOD RATE %, POST, SOFT, HARD

Table O. View Menu

Item	Application	Range	Description	Default
BOILER 1	All	ON <> OFF	Enable or Disable the operation of boilers. 4 boiler range, 1 is enabled by default	ON
TARGET	H MODE 1, 2, 3	RSET <> SETP	RSET = Outdoor Reset SETP =Setpoint	SETP
TANK SETP	WH	OFF, 50°F to 160°F (10°C to 71°C)	Tank set point temperature	125°F (52°C)
TANK DIFF	WH	2°F to 10°F (1°C to 5°C)	Tank Differential temperature	3
MODE	H MODE 1, 2, 3	1, 2, 3	Piping and application configuration.	1
SETPOINT	H MODE 1, 2, 3	50°F (10°C) to PIM value*	Boiler target temperature while a heat demand is present for setpoint operation	180°F (82°C)
CASCADE TYPE	Cascade Master Only	SEQ <> PAR	Cascade operation type	SEQ
CASCADE ALARM	Cascade Master Only	ON <> OFF	Cascade Alarm to all units in case of any unit presents alarm.	ON
OUT START	H MODE 1, 2, 3	35°F to 85°F (2°C to 29°C)	Outdoor starting temperature - outdoor reset	70°F (21°C)
OUT DESIGN	H MODE 1, 2, 3	-60°F to 45°F (-51°C to 7°C)	Outdoor design temperature - outdoor reset	10°F (-12°C)
Boil START	H MODE 1, 2, 3	35°F to 150°F (2°C to 66°C)	Starting boiler target temperature when the outdoor temperature is at outdoor start outdoor reset	70°F (21°C)
Boil DESIGN	H MODE 1, 2, 3	70°F to 200°F (21°C to 93°C)	Design boiler target temperature when the outdoor temperature is at outdoor design outdoor reset	180°F (82°C)
Boil MASS	All	1<>2<>3	Thermal mass of the boiler	1
TARGET MAX	H MODE 1, 2, 3	100°F (38°C) to PIM value*	Maximum target system temperature	220°F (104°C)
TARGET MIN	H MODE 1, 2, 3	OFF, 50°F to 190°F (10°C to 88°C)	Minimum target system temperature	50°F (10°C)
TARGET DIFF	H MODE 1, 2, 3	2°F to 42°F (1°C to 24°C)	Differential for target system temperature	10°F (-12°C)
DHW SENSOR	H MODE 1, 2, 3	OFF <> ON	Selects whether a DHW sensor is used for indirect DHW tank	OFF
DHW DIFF	H MODE 2, 3	2°F to 10°F (1°F to 5°C)	Differential for the target indirect DHW tank temperature	6°F (-14°C)
IND SUPPLY	H MODE 2, 3	OFF, 50°F (10°C) to PIM value*	Target boiler temperature for the DHW heat exchanger during indirect DHW operation	180°F (82°C)
DHW PRIORITY	H MODE 2	OFF <> ON	Selects whether or not Indirect DHW priority is active during indirect DHW operation	OFF
PRI OVR	H MODE 2, 3	Au, 0:10hr to 2:00hr	Sets the length of the indirect DHW priority override time	1:00hr
BOIL PURGE	All	0:20min to 10:00min	Sets the length of the boiler pump post purge	20 seconds
SYS PURGE	All	OFF, 0:20min to 20:00min	Sets the length of the system pump post purge	20 seconds
WWSD	H MODE 1, 2, 3	40°F to 100°F (4°C to 38°C)	The system warm weather shutdown temperature outdoor reset	70°F (21°C)
UNITS	All	deg F <> deg C	Show units using icons in display	deg C
MODBUS	All	OFF<>MNTR<> TEMP<>RATE	ModBus Operating Mode: Off, Monitor, Temp Control, Rate Control	OFF
ADDRESS	All	1 to 247	ModBus slave address	1
DATA TYPE	All	RTU <> ASCI	Modbus data type	RTU
BAUD RATE	All	2400<>9600<> 19K2<>57K6<>115K		19K2
PARITY	All	NONE<>EVEN<>ODD		EVEN

* Fixed values, based on ID card.

Table P. Setup/Adjust Menu

Boiler Menu

The Boiler View displays various items regarding ignition, temperature monitoring, and modulation rates. As well as software and hardware information

Item	Application	Description
BOILER 1	ALL	Enables Boiler for operation
BOILER 2	CASCADE	Enables Ft_bus Boiler for cascade operation
BOILER 3	CASCADE	Enables Ft_bus Boiler for cascade operation
BOILER 4	CASCADE	Enables Ft_bus Boiler for cascade operation
CASCADE	TN-bus Cascade Follower	Set Cascade ID for TN-bus follower, see VERSA IC Manual (5000.72).
IGNITION	ALL	IDLE=no CFH PREP=pre-purge or inter-purge between trials for ignition IGN=trial for ignition BURN=burner operating POST=post purge HARD=a hard lockout fault has occurred requiring manual reset (Ignition Lockout or manual high limit) SOFT=a soft. lockout fault has occurred which interrupts the heating cycle (any safety other than ignition or manual high limit). The CFH will resume after the soft. lockout fault has been corrected and a 15 min. waiting period has expired.
VENT WALL	Not available	Not Available
LIMIT TEMP	ALL	Current Outlet-Limit temperature
EMS Vdc	ALL	Current EMS signal in Volts DC
FIRE RATE	ALL	PIM firing rate
SPEEDX 1000	ALL	Blower speed in revolutions per minute (rpm) x 1000
OUTLET MAX	H Mode 1, 2, 3	Defines Max Outlet temperature offset above Target Setpoint (Press and hold up and down arrows for 3 seconds to enable adjustment). see VERSA IC manual (5000.72).
OPERATOR	ALL	Operator Potentiometer setting on PIM
DIFF	ALL	Current auto differential – Fixed by PIM
Pump Post	ALL	Sets the length of the boiler pump purge
FLAME CUR	ALL	Flame current in micro-amps (μA)
MASS	ALL	Thermal mass recovery see VERSA IC manual (5000.72).
IDENTITY	ALL	Identifies the unit as boiler, water heater or pool heater
IGN TYPE	ALL	PIM Board type
ID CARD	ALL	Identifies Raypak Identity Card
ERROR CODE	ALL	Current Error Code

Table Q. Boiler Menu

Monitor Menu

The Monitor Menu records and displays critical Boiler information, such as, Cycle times, Run times, and Maximum/ Minimum temperature readings depending on the setup.

Item	Application	Description
RUN TIME Burner 1	All	Burner run time (hours). Press UP/DOWN for 1 sec to clear.
Cycles Burner	All	Number of burner cycles. Press UP/DOWN for 1 sec to clear.
RUN TIME Boiler pump	All	Boiler pump run time (hours). Press UP/DOWN for 1 sec to clear.
RUN TIME System pump	All	System pump run time (hours). Press UP/DOWN for 1 sec to clear.
RUN TIME DHW pump	H MODE 2, 3	DHW pump run time (hours). Press UP/DOWN for 1 sec to clear.
OUTLET HI	All	Records the highest boiler outlet temperature. Press UP/DOWN for 1 sec to clear.
OUTLET LO	All	Records the lowest boiler outlet temperature. Press UP/DOWN for 1 sec to clear.
INLET HI	All	Records the highest boiler inlet temperature. Press UP/DOWN for 1 sec to clear.
INLET LO	All	Records the lowest boiler outlet temperature. Press UP/DOWN for 1 sec to clear.
DELTA T	All	Captures the highest Delta T Temperature recorded. Press UP and DOWN buttons for 3 sec to clear this entry
OUTDOOR HI	H MODE 1, 2, 3	Records the highest outdoor temperature. Press UP/DOWN for 1 sec to clear.
OUTDOOR LO	H MODE 1, 2, 3	Records the lowest outdoor temperature. Press UP/DOWN for 1 sec to clear.
SYSTEM HI	All	Records the highest supply temperature. Press UP/DOWN for 1 sec to clear.
SYSTEM LO	All	Records the lowest supply temperature. Press UP/DOWN for 1 sec to clear.
IND HI	H MODE 1, 2, 3	Records the highest Indirect supply temperature. Press UP/DOWN for 1 sec to clear.
IND LO	H MODE 1, 2, 3	Records the lowest Indirect supply temperature. Press UP/DOWN for 1 sec to clear.
TANK HI	WH	Records the highest Tank temperature. Press UP/DOWN for 1 sec to clear.
TANK LO	WH	Records the lowest Tank temperature. Press UP/DOWN for 1 sec to clear.

Table R. Monitor Menu

Toolbox Menu

The Toolbox Menu logs all error codes from the VERSA and PIM, as well as other functions. Up to 15 error codes can be logged for a maximum of 24 days.

Item	Description
Lookup Active Error	Look up and display the active error info.
USER TEST	Select ON to start the function. The setting returns to default after the test is run. See **"User Test" on page 47** for details.
MAX HEAT	Select ON to start the function. The setting will time out to OFF after 24 hours or can be set to OFF again by the user. See the VERSA IC manual (5000.72) for details.
SOFTWARE VERSION (SVN)	Software number of the Raypak VERSA.
DEFAULTS	Resets to factory settings. Press UP and DOWN for 1 second to show CLR and load factory defaults to all settings. This will also clear all history.
HISTORY lookup logged error	Displayed when an error code is present. 1 indicates the most recent error code. Press UP and DOWN for 1 second to clear the error logs.

Table S. Toolbox Menu

Outdoor Reset Concept

The Temperature controller can change the System Set Point based on outdoor temperature (Outdoor Reset). The temperature controller varies the temperature of the circulating heating water in response to changes in the outdoor temperature. The heating water temperature is controlled through the modulation and/or sequencing of the cascade.

The Temperature controller can also control the system circulating pump with an adjustable Outdoor Cutoff. When the outdoor temperature is above the Outdoor Cutoff, the pump is turned off and no heating water is circulated through the system. When the outdoor temperature drops below the Outdoor Cutoff, the system pump relay is activated and the heating water circulates through the system. The temperature of the heating water is controlled by the Reset Ratio, Water Offset, and changes with the outdoor temperature.

Reset Ratio/Outdoor Reset

When a building is being heated, heat escapes through the walls, doors, and windows to the colder outside air. The colder the outside temperature, the more heat escapes. If you can input heat into the building at the same rate that it is lost out of the building, then the building temperatures will remain constant. The Reset Ratio is an adjustment that lets you achieve this equilibrium between heat input and heat loss.

The starting point for most systems is the 1.00 (OD):1.00 (SYS) (Outdoor Temperature: Heating Water Temperature) ratio. This means that for every degree the outdoor temperature drops, the temperature of the heating water will increase one degree. With the VERSA, both ends of the slope are adjustable. It is factory set at 70°F (21°C) water temperature (Boil START) at 70°F (21°C) outdoor air (OUT START), and 180°F (82°C) water temperature (Boil DESIGN) at 10°F (-12°C) outdoor air (OUT DESIGN).

Each building has different heat loss characteristics. A very well insulated building will not lose much heat to the outside air, and may need a Reset Ratio of 2.00 (OD):1.00 (SYS) (Outdoor: Water). This means the outdoor temperature would have to drop 2 degrees to increase the water temperature 1 degree. On the other hand, a poorly insulated building may need a Reset Ratio of 1.00 (OD):2.00 (SYS). This means that for each degree the outdoor temperature dropped the water temperature will increase 2 degrees. The VERSA control Reset Ratio allows for full customization to match any buildings heat loss characteristics.

A heating curve that relies not only on Outdoor temperature but also on the type of radiation will improve heat comfort. The user can fine tune these adjustments based on the specific building need.

Reset Ratio Settings

The controller uses the four following settings to determine the reset ratio:

1. Boiler Start (**Boil START**). The Boil START temperature is the theoretical boiler supply water temperature that the heating system requires when the outdoor air temperature equals the OUT START temperature setting. The Boil START is typically set to the desired building temperature.
2. Outdoor Start (**OUT START**). The OUT START temperature is the outdoor temperature at which the control provides the Boil START water temperature to the system. The OUT START is typically set to the desired building temperature.
3. Outdoor Design (**OUT DESIGN**). The OUT START is the outdoor temperature that is typical coldest annual temperature where the building is located. This temperature is used when completing heat loss calculation for the building.
4. Boiler Design (**Boil DESIGN**). The Boil DESIGN temperature is the water temperature required to heat the boiler zones when the outdoor air is as cold as the OUT DESIGN temperature.

Warm Weather Shut Down (WWSD)

When the outdoor air temperature rises above the WWSD setting, the control turns on the WWSD segment in the display. When the control is in the Warm Weather Shut Down, the Dem 1 segment is displayed if there is a heat demand. However, the control does not operate the boiler to satisfy this demand. The control continues to respond to DHW demands.

Reset Ratio

The controller uses the following four settings to calculate the Reset Ratio (RR). For example, when using the default values, the RR is:

$$\text{RESET RATIO} = \frac{(\text{OUTDOOR START} - \text{OUTDOOR DESIGN})}{(\text{BOILER DESIGN} - \text{BOILER START})}$$

RR = (70 - 10) / (180 - 70) = 0.55
Therefore, the RR is 0.55:1 (Outdoor : Water).

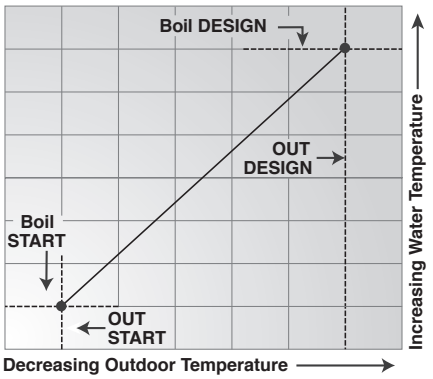

Figure 41. Reset Ratio

NOTE: The wiring diagrams in this manual show all standard options. Refer to the large wiring diagram provided with your boiler for options installed on your specific unit(s).

6. WIRING DIAGRAM

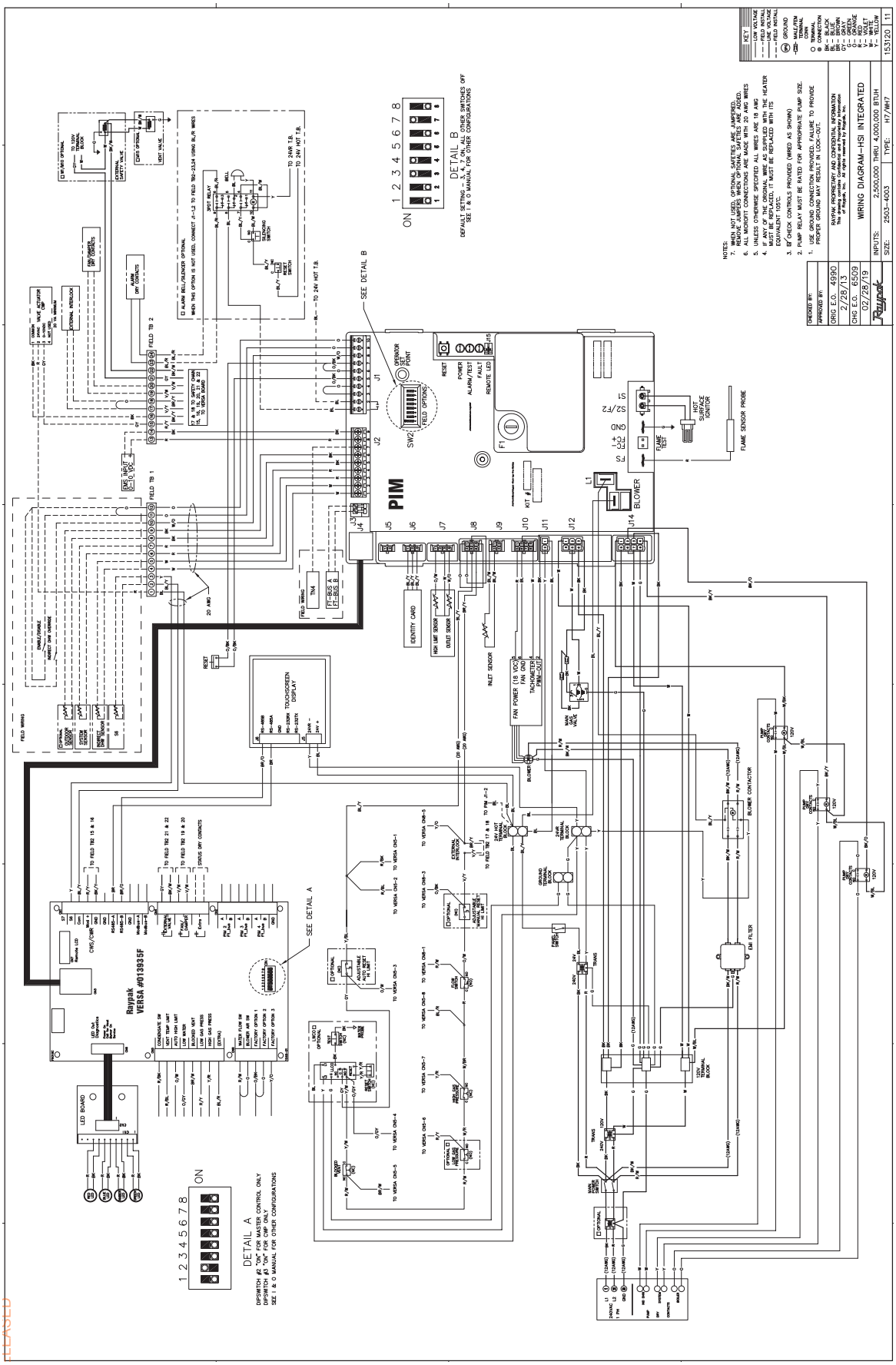

7. START-UP

NOTE: The following steps must be performed by a factory-trained technician.

Pre Start-up

Filling System (Heating Boilers)

Fill system with water. Purge all air from the system. Lower system pressure. Open valves for normal system operation, and fill system through feed pressure. Manually open air vent on the compression tank until water appears, then close vent.

Air Purge (Domestic Hot Water Heaters)

Purge all air from system before heater operation. This can be normally accomplished by opening a down-stream valve.

The MVB 2503-4003 models have two air vent valves located on top of the upper headers as standard. These valves are used to purge air from the heat exchanger.

Venting System Inspection

1. Check all vent pipe connections and flue pipe material.

⚠CAUTION: An air vent valve should be installed at the highest point in the system for proper operation. If water piping is located higher than the header, an air vent valve should be located at the highest point in the installed system.

2. Make sure vent terminations are installed per code and are clear of all debris or blockage.

For Your Safety

This appliance has a hot surface igniter. It is equipped with an ignition device which automatically lights the burners. Do not try to light the burners by hand.

BEFORE OPERATING, smell all around the appliance area for gas. Be sure to smell near the floor because some gas is heavier than air and will settle on the floor.

⚠WARNING: If you do not follow these instructions exactly, a fire or explosion may result causing property damage, personal injury or loss of life.

WHAT TO DO IF YOU SMELL GAS:

- Do not try to light any appliance.
- Do not touch any electrical switch; do not use any telephone in your building.
- Immediately call your gas supplier from a neighbor's telephone. Follow the gas supplier's instructions.
- If you cannot reach your gas supplier, call the fire department.
- Use only your hand to turn the gas control valve handle. Never use tools. If the handle will not turn by hand, do not try to repair it; call a qualified service technician. Forced or attempted repair may result in a fire or explosion.
- Do not use this appliance if any part has been under water, immediately call a qualified service technician to inspect the appliance and to replace any part of the control system and any gas control which has been under water.
- Check around unit for debris and remove combustible products, i.e. gasoline, etc.

Pre Start-up Check

1. Verify the heater is filled with water.
2. Check system piping for leaks. If found, repair immediately.
3. Vent air from system. Air in system can interfere with water circulation.
4. Purge air from gas line to heater.

Initial Start-up

Required tools

- (1) 12-0-12 (24" scale) U-tube manometer
- (2) 6-0-6 (12" scale) U-tube manometer
- Screwdrivers (assorted sizes and shapes)
- (1) Crescent wrench (8" or 10")
- (1) Multi-meter
- (1) Amp probe

(Metric Allen wrenches will be required for servicing the gas valve, but not during start-up)

NOTE: Digital manometers are not recommended.

Preparation

⚠WARNING: Do not turn on gas at this time.

Check Power Supply

With multimeter at incoming power, check voltage between:

L1 - Ground (≈110 VAC)

L2 - Ground (≈110 VAC)

L1 - L2 (≈220 VAC)

Attach Manometers to Measure Pressures

1. Turn off main gas valve.
2. Attach (1) 12" scale manometer to an upstream bleedle valve on the gas supply pipe to the heater Measure point “A” in **Figure 42**.
3. Attach (1) 12" scale manometer on the fan suction pressure hose. Pull black cap from the air pressure tee as shown in **Figure 43** and connect the manometer. NOTE: Retain caps for reinstallation later.

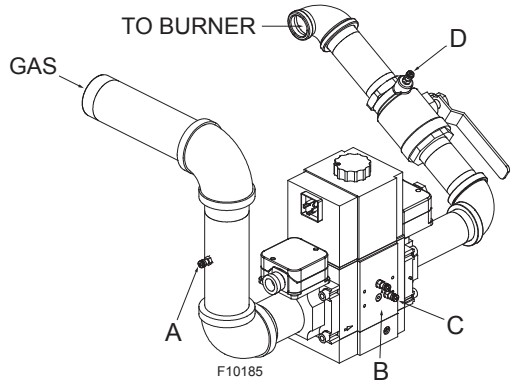

Figure 42. Gas Pressure Measurement Locations

Check Gas Supply Pressure

1. Slowly turn on main gas shut-off valve.
2. Read the gas supply pressure from the manometer; minimum supply pressure for natural gas is 4.0 in. WC (1.0 kPa), recommended supply is 7.0 in. WC (1.73 kPa), minimum supply pressure for propane gas is 4.0 in. WC (1.0 kPa), recommended supply is 11.0 in. WC (2.71 kPa) (dynamic readings, full fire input).
3. If the gas pressure is greater than 14.0 in. WC, turn off the main gas shut-off valve, upstream of the heater.

Start-Up

NOTE: The values in Table T represent the conditions when the heater is at full firing rate at sea level.

NOTE: Pressure and combustion data are provided with the heater.

1. Turn power on.
2. Turn on the heater, wait approximately 15 seconds after the blower starts, the igniter should start to glow (observable through the observation port located at the front, below the gas valve). Look into the sight glass located just below the gas valve near the front of the unit to check igniter operation. Gas valve should open in 45-60 seconds.
3. The heater ignites at 30% to 40% of full rate (as indicated on the LCD display of the temperature controller located behind the front panel).
4. If the burner fails to light on the first trial, it will try for ignition up to three times before going into lockout with the standard ignition module. If the heater is equipped with the optional single-try ignition module, it will go into lockout.
5. Wait until the controller indicates 100% on the firing rate display screen (approximately 30 seconds).

Blower Check

1. Check blower suction using the manometer attached to the air pressure tee as shown in **Figure 43**, with the heater firing at 100% input. The reading should be as noted in **Table T** for both natural and propane gas.

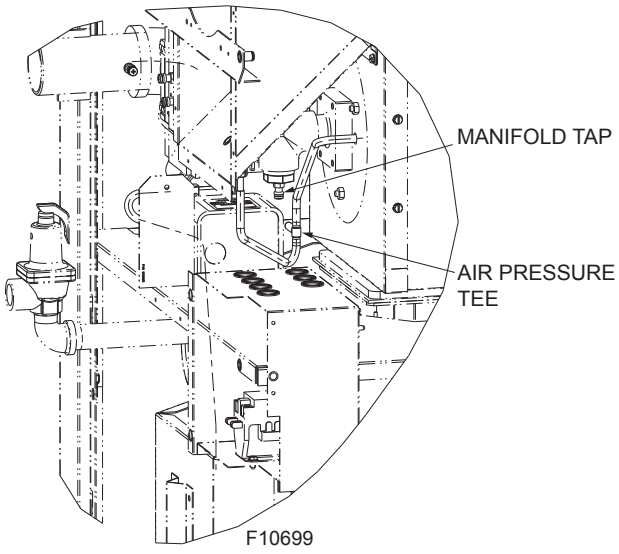

Figure 43. Air Pressure Tee

2. When firing at 100%, the desired heater combustion CO_2 is 8.8 to 9.8% for natural gas and 10.2 to 11.2% for propane with CO less than 100 ppm. If this combustion cannot be achieved with the blower suction within the tolerances specified in Table S, contact the factory.
3. CO_2 and CO levels must be checked at minimum fire. When firing at minimum fire, the desired combustion CO_2 is 7.5 to 9.0% for natural gas and 8.5 to 10.0% for propane gas with CO less than 100 ppm. If CO_2 values are not within the ranges specified; and if CO is above 100 ppm in either case, stop running the unit and contact your Raypak representative. Visit www.raypak.com for contact information.

⚠WARNING: Improper installation, adjustment, alteration, service or maintenance can cause property damage, personal injury, exposure to hazardous materials or loss of life.

⚠WARNING: The unit has been factory tested and per-certified at the reference gas pressure as shown on the unit decal. If the desired CO_2 and CO values are not achieved at the listed air pressure in Table T within the tolerance specified, contact your local Raypak Representative or Raypak Factory for direction. Do not alter the settings of installed components. Tampering with preset values can lead to poor performance of the unit and result in personal injury, death or property damage.

NOTE: Technician performing initial start-up must carry a calibrated combustion analyzer to ensure desired combustion levels are achieved.

Model	Air Pressure Setting (in. WC)		Setting Tolerance
	Nat. Gas	Propane	
2503	-4.1 (-1.01 kPa)	-4.3 (-1.06 kPa)	±.2 in. WC (+/- 0.05 kPa)
3003	-4.1 (-1.01 kPa)	-4.3 (-1.06 kPa)	±.2 in. WC (+/- 0.05 kPa)
3503	-4.1 (-1.01 kPa)	-4.3 (-1.06 kPa)	±.2 in. WC (+/- 0.05 kPa)
4003	-4.1 (-1.01 kPa)	-4.3 (-1.06 kPa)	±.2 in. WC (+/- 0.05 kPa)

Table T. MVB Air Pressure Settings

User Test

Set DIP switch #1 on the VERSA IC control to “ON”. On Touchscreen, click Menu icon, Tools icon, Systems Tools, Press "Start" to initiate User Test sequence.

- User Test START is displayed.
- Pressing Hold/Skip button advance through the user test.
- The Boil MIN/MAX steps for burner operation are only run for enabled boilers.
- Local Heat/DHW/EMS demands must be present for burner operation.
- On the first press of the Hold/Skip button, the test step is held and “HOLD” is flashed at 1Hz.
- On the second press of the Hold/Skip button, the test step is incremented.
- If boiler outlet temperature reaches the PIM Hi-Limit, the boiler will be ramped down to keep the temperature in a safe range.
- Pressing the Hold/Skip button from Boiler Max will end the User Test function.

Number Field	Output Action
SYS	System Pump relay turns on.
DHW	DHW Pump relay turns on.
PMP 1	System and Boiler Pump relays turn on.
Boil 1	Ignite Boiler Burner.
Min 1	Hold Boiler at Min Fire.
Max 1	Ramp Boiler to Max Fire and hold.

Table U. User Test Fields

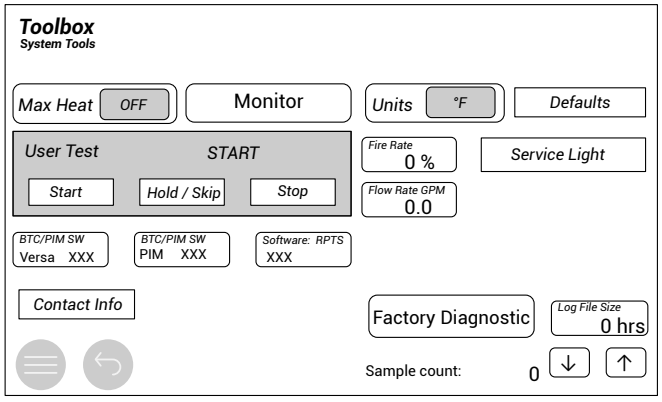

Figure 44. Touchscreen Toolbox Menu

Safety Inspection

1. Check all thermostats and high limit settings.
2. During the following safety checks leave manometers hooked up, check and record.
3. If other gas-fired appliances in the room are on the same gas main, check all pressures on the MVB with all other equipment running.
4. Check thermostats for ON-OFF operation.
5. Check high limits for ON-OFF operation.
6. While in operation, check flow switch operation.
7. Check the low gas pressure switch (if provided). (For proper adjustment, use the attached manometers, if available, to set pressure. The scales on the switch are approximate only.) Low gas pressure switch (if provided) must be set at 3.0 in. (0.74 kPa) WC for natural gas and propane gas.
8. Make sure that the high gas pressure switch is set to 3.0 in. (0.74 kPa) WC for both natural gas and propane gas.

Finishing

1. Record all data on the “Start-up Checklist” located at the back of this manual.
2. Disconnect the manometers and reconnect the cap on the fan pressure tee and reinsert the sealing screws into the bleedle valves.
3. Start-up is complete and the heater should be operating properly.

Follow-Up

Safety checks must be recorded as performed. Turn heater on. After main burner ignition:

1. Check manometer for proper readings.
2. Cycle heater several times and re-check readings.
3. Remove all manometers and replace caps and screws.
4. Check for gas leaks one more time.

Leak Test Procedure: Dual-Seat Gas Valve

Proper leak testing requires three pressure test points in the gas train. Remove the upper front panel and swing the front J-box out of the way to access the gas valve for this test. Refer to **Figure 42**.

Test point A is a bleedle valve located upstream of the combination gas valve on the supply manifold.

Test point B is a bleedle valve located between the two automatic gas valve seats.

Test point C is a bleedle valve located downstream of both automatic gas valve seats and upstream of the manual valve. Refer to **Figure 42**.

These tests are to be conducted with the electrical power to the heater turned OFF.

1. Manually close the downstream leak test valve.
2. Open the bleedle valve at test point A and connect a manometer to it. Verify that there is gas pressure and that it is within the proper range (NOTE: must not exceed 14.0 in. W.C. (3.45 kPa)).
3. Open test point B and connect a rubber tube to it. Connect the other end of the tube to a manometer and look for a build-up of pressure. Increasing pressure indicates a leaking gas valve which must be replaced.
4. Next, close the upstream manual gas valve (field supplied) and remove the manometers from the bleedle valves in test point A and test point B. Connect a rubber tube from the test point A bleedle valve to the test point B bleedle valve and open the upstream manual gas valve. Make sure that test point A and B bleedle valves have been opened so as to allow gas to flow. This will bring gas pressure to the second valve seat.
5. Open the bleedle valve at test point C and connect a second rubber tube to it. Connect the other end of the tube to a manometer and look for a build-up of pressure. Increasing pressure indicates a leaking second seat in the gas valve which must be replaced.
6. Remove rubber tube and manometers. Close each bleedle valve as the tubes are removed.
7. After no leakage has been verified at all valve seats and test valve, open downstream leak test valve and restore electrical power to the heater.

Post Start-Up Check

Check off steps as completed:

1. Verify that the heater and heat distribution units or storage tank are filled with water.
2. Verify that air has been purged from the system.
3. Verify that air has been purged from the gas piping, and that the piping has been checked for leaks.
4. Confirm that the proper start-up procedures were followed.
5. Inspect burner to verify flame.

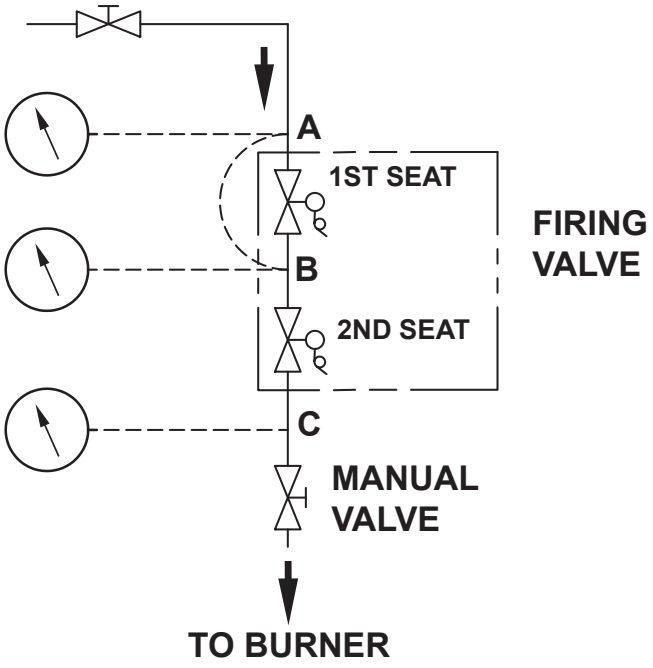

Figure 45. Leak Test Procedure

6. Test safety controls: If heater is equipped with a low water cut-off or additional safety controls, test for operation as outlined by manufacturer. Burner should be operating and should go off when controls are tested. When safety devices are restored, burners should re-ignite after pre-purge time delay.
7. To test the fixed manual reset high limit built into the PIM, first set DIP switch #8 on the PIM to the ON position. This will activate a Commission Test Mode which will turn on the amber Alarm/Test LED on the PIM. The fixed high limit setting is temporarily overridden to match the setpoint potentiometer position on the PIM. The high limit can now be adjusted by the potentiometer to assist in commission testing and verification of high limit functionality. The VERSA IC will allow one-time operation of the limit and then must be returned to normal operation by turning DIP switch #8 back to the OFF position. Power to the unit must then be cycled off, then on to return to normal operation.
8. Test ignition system safety device:
   a. Close manual gas valve. Turn power on.
   b. Close Enable/Disable circuit to call for heat.
   c. The burner should attempt three trials for ignition and then lock out. Single-try ignition will try only once and then lock out.
   d. Open manual gas valve. Reset the ignition control by pressing for one second and then releasing the reset button on either the user interface or at the PIM to clear the ignition fault.
9. To restart system, follow lighting instructions in the Operation section.
10. Check to see that the high limit control is set above the design temperature requirements of the system. For multiple zones: Check to make sure the flow is adjusted as required in each zone.
11. Check that the heater is cycled with the thermostat. Raise the setting on the thermostat to the highest setting and verify that the heater goes through the normal start-up cycle. Reduce to the lowest setting and verify that the heater goes off.
12. Observe several operating cycles for proper operation.
13. Set the heater thermostat to desired temperature.
14. Review all instructions shipped with this heater with owner or maintenance person, return to envelope and give to owner or place the instructions inside front panel on heater.

8. OPERATION

Lighting Instructions

1. Before operation, make sure you have read all of the safety information in this manual.
2. Remove upper front panel.
3. Set the thermostat to the lowest setting.
4. Turn off all electrical power to the appliance.
5. This appliance is equipped with an ignition device which automatically lights the burner. Do not try to light the burner by hand.
6. Turn on main manual gas valve field installed near gas inlet connection on back of heater.
7. Turn on all electrical power to the appliance.
8. Set thermostat to desired setting. The appliance will operate. The igniter will glow after the pre-purge time delay (15 seconds). After igniter reaches temperature (30 seconds) the main valve should open. System will try for ignition up to three times; once with the single-try option. If flame is not sensed, lockout will commence.
9. If the appliance will not operate, follow the instructions “To Turn Off Gas To Appliance,” and call your service technician or gas supplier.

10. Replace upper front panel.
11. If heater fails to start, verify the following:
    a. There are no loose connections or that the service switch is off.
    b. High temperature limit switch (optional) is set above water temperature or manual reset high limit is not tripped.
    c. Enable/Disable circuit is closed.
    d. Gas is on at the meter and the heater.
    e. Incoming dynamic gas pressure to the gas valve is NOT less than 4.0 in. W.C. (1.0k Pa) for natural gas or propane gas.

To Turn Off Gas To Appliance

1. Shut off manual gas valve field installed near gas inlet connection on back of heater.
2. Remove upper front panel.
3. Adjust setpoint to lowest setting.
4. Turn off all electrical power to the appliance if service is to be performed.
5. Replace access panel.

9. TROUBLESHOOTING

MVB Error Codes

If any of the sensors detect an abnormal condition or an internal component fails during the operation of the MVB, the display may show the error. This code may either be the result of a temporary condition in which case the display will revert to its normal readout when the condition is corrected, or it may be the result of a condition that the controller has evaluated as not safe to restart the unit. In this case, the unit control will be locked out, requiring the maintenance person to manually reset the control by pressing and releasing the RESET button.

Heater Errors

When an error condition occurs, the controller will display an error code on the display module. These error codes and several suggested corrective actions are included in the MVB Fault Text section on the following page.

Heater Faults

1. When a fault condition occurs, the controller will flash a red light on the PIM and display the error code on the user interface. The alarm output will also be activated. Most fault conditions will also cause the boiler pump to run in an attempt to cool the unit.
2. Note the error code, either through the flash code on the PIM and/or from the Toolbox menu on the user interface, and reference the explanation of the fault along with troubleshooting steps in the MVB fault text section.
3. Press and release the RESET key to clear the fault on the user interface and resume operation. Be sure to observe the operation of the unit for a period of time to ensure correct operation and no reoccurrence of fault code(s).

⚠DANGER: When servicing or replacing components that are in direct contact with the water, be certain that:

- **There is no pressure in the boiler. (Pull the release on the relief valve. Do not depend on the pressure gauge reading).**
- **The boiler water is not hot.**
- **The electrical power is off.**

⚠WARNING: When servicing or replacing any components of this unit be certain that:

- **The gas is off.**
- **All electrical power is disconnected.**

⚠WARNING: Do not use this appliance if any part has been under water. Improper or dangerous operation may result. Contact a qualified service technician to inspect the boiler and to repair or replace any part of the boiler that has been under water prior to placing the boiler back in operation.

⚠CAUTION: Wiring errors can cause improper and dangerous operation. Verify proper operation after servicing. See wiring diagram.

⚠CAUTION: If overheating occurs or the gas supply fails to shut off, do not turn off electrical power to the circulating pump. This may aggravate the problem and increase the likelihood of boiler damage. Instead, shut off the gas supply to the boiler at the gas service valve.

Raymote Troubleshooting

Please refer to the Raymote installation and operation manual (5000.721).

MVB Fault Text

Error Display

If there is an active error, then it is displayed as the first item in the Toolbox Menu and it is the default display for the control until the error is resolved.

Error Item	Description and Troubleshooting
OUTLET SEN	Check the outlet water sensor and its wiring.
LIMIT SEN	Check the high limit sensor and its wiring.
INLET SEN	Check the inlet sensor and its wiring.
GAS PRESS	Check PIM wiring.
IGNITION	Reset control, push and release RESET button
LIMIT TRIP	Boiler temperature tripped the high limit.
FLAME	False flame detected. Shut off gas supply, recycle power.
ID CARD	Identity card, check ID card and wiring.
IGN CTRL	Internal control fault. Reset power, replace control.
DELTA T	Temperature difference between the inlet and outlet exceeded the set point. Check water flow.
LOW 24VAC	Low 24 VAC power. Check power supply wiring and transformer.
BLOW SPEED	Blower speed out of range. Check blower wiring and blower.

Table V. Error Display

LED Error Code Listing

Active errors detected are indicated by LED lights on the PIM.

LED Code	Error Mode	Recommended Troubleshooting
Off	Normal Operation	
Red LED steady ON, Green Power LED OFF	ID Card Fault	Check that the proper ID card is securely connected. Perform a power and system restart.
Steady ON	Internal Control Failure	Perform a power and system reset. If fault remains, replace PIM.
1 flash	N/A	N/A
2 flashes	False Flame Error	Check for proper gas valve closure. Clean burner and electrodes.
3 flashes	Ignition Lockout Fault	Check the gas supply. See table for more information.
4 flashes	N/A	N/A
5 flashes	Low Voltage Fault	Check the 24 VAC input voltage. The voltage must be above 18.0 VAC.
6 flashes	N/A	N/A
7 flashes	Hi-Limit Fault	Check for proper water flow. Check hi-limit and outlet sensor.
8 flashes	Sensor Fault	See VERSA for fault identification. Check sensor wiring.
9 flashes	N/A	N/A
10 flashes	N/A	N/A
11 flashes	N/A	N/A
12 flashes	N/A	N/A
13 flashes	Hi-Temperature Delta Fault	Check pump operation. Confirm proper water flow across heat exchanger.
14 flashes	Ft-Bus Communications Fault	Verify VERSA is connected and operating. Check the cable between the VERSA and PIM.
15 flashes	Safety circuit open	Confirm all safeties are functioning normally. Check continuity at J8, pins 5 and 6 at the PIM.

Table W. PIM LED Error Codes

Sensor Resistance Values

Water Sensor / Outdoor Sensor	
Water Temperature (°F)	**Resistance (ohms)**
32 (0°C)	32550
41 (5°C)	25340
50 (10°C)	19870
59 (15°C)	15700
68 (20°C)	12490
77 (25°C)	10000
86 (30°C)	8059
95 (35°C)	6535
104 (40°C)	5330
113 (45°C)	4372
122 (50°C)	3605
131 (55°C)	2989
140 (60°C)	2490
149 (65°C)	2084
158 (70°C)	1753
167 (75°C)	1481
176 (80°C)	1256
185 (85°C)	1070
194 (90°C)	915
203 (95°C)	786
212 (100°C)	667

Table X. Approximate Sensor Resistance Values

10. MAINTENANCE

Suggested Minimum Maintenance Schedule

Regular service by a qualified service agency and maintenance must be performed to ensure maximum operating efficiency. Daily and monthly maintenance as outlined below may be performed by onsite maintenance staff.

Daily

1. Check that the area where the heater is installed is free from combustible materials, gasoline, and other flammable vapors and liquids.
2. Check for and remove any obstruction to the flow of combustion or ventilation air to heater.

Monthly

1. Check for piping leaks around pumps, mixing valves, relief valves, and other fittings. If found, repair at once. DO NOT use petroleum-based stop-leak compounds.
2. Visually inspect burner flame.
3. Visually inspect venting system for proper function, deterioration or leakage.
4. Visually inspect for proper operation of the condensate drain in the venting. If leaks are observed repair at once.
5. Check air vents for leakage.

Yearly (Beginning Of Each Heating Season)

Schedule annual service by qualified service agency.

1. Visually check top of vent for soot. Call service person to clean. Some sediment at bottom of vent is normal.
2. Visually inspect venting system for proper function, deterioration or leakage. Ensure that condensate drain is inspected and ensure that condensate is being directed to appropriate condensate management system or drain, as required by local codes.
3. Check that area is free from combustible materials, gasoline, and other flammable vapors and liquids.
4. Follow **"Pre Start-up Check" on page 45**.
5. Visually inspect burner flame. It should be light blue at full input. Remove and visually inspect hot surface igniter and sensor for damage, cracking or debris build-up.
6. Check operation of safety devices. Refer to manufacturers' instructions.
7. Follow oil-lubricating instructions on pump (if required). Over-oiling will damage pump. Water-lubricated circulators do not need oiling.
8. To avoid potential of severe burn, DO NOT REST HANDS ON OR GRASP PIPES. Use a light touch; supply piping will heat up quickly.
9. Check blower and blower motor.
10. Check for piping leaks around pumps, relief valves and other fittings. Repair, if found. DO NOT use petroleum-based stop-leak.

Periodically

1. Check relief valve.
2. Test low water cut-off (if equipped). (With heater in pre-purge, depress the low water cut-off test button. Appliance should shut-off and ignition fault light should come on. Depress reset button on front of heater control panel to reset).

Preventive Maintenance Schedule

The following procedures are recommended and are good practice for all MVB installations.

Daily

1. Check gauges, monitors and indicators.
2. Check instrument and equipment settings. See **"Post Start-Up Check" on page 48**.
3. Check burner flame. (Should see light blue flame at full input rate).

Weekly

For low-pressure heaters, test low-water cut-off device.

Monthly

1. Check flue, vent, stack, or outlet dampers.
2. Test blower air pressure. See **"Post Start-Up Check" on page 48**.
3. Test high and low gas pressure interlocks (if equipped). See **"Post Start-Up Check" on page 48**.

Semi-Annually

1. Check flame failure detection system components.
2. Confirm firing rate on the unit by clicking on the view icon and selecting the Master Info screen.
3. Check piping and wiring of all interlocks and shut-off valves.

Annually

1. Test flame failure detection system and pilot turndown.
2. Test high limit and operating temperature. See **"Post Start-Up Check" on page 48**.
3. Check flame sensor.
4. Conduct a combustion test at full fire. Carbon dioxide should be 8.8 to 9.8% at full fire for natural gas, and 10.2 to 11.2% for propane gas. Carbon monoxide should be < 100 ppm.
5. Check emission at minimum fire and record CO and CO2 reading. CO must be less than 100 ppm for all fuels. CO2 must be between 7.5 to 9.0% for natural gas, 8.5 to 10.0% for propane gas. If CO and CO2 are not within these ranges, stop running the unit and contact your Raypak representative.
6. Check valve coil for 50 cycle hum or buzz. Check for leaks at all valve fittings using a soapy water solution (while heater is operating). Test other operating parts of all safety shut-off and control valves and increase or decrease settings (depending on the type of control) until the safety circuit opens. Reset to original setting after each device is tested.
7. Perform leakage test on gas valves. See **Figure 45.**
8. Inspect and clean burner using shop air.

As Required

1. Recondition or replace low water cut-off device (if equipped).
2. Check sediment trap and gas strainers.
3. Check flame failure detection system. See **"Post Start-Up Check" on page 48**.
4. Check igniter. (Resistance reading should be 40-75 ohms at 77°F).
5. Check flame signal strength. (Flame signal should be greater than **1 microampere** as measured at the 2 pins on the bottom of the PIM).
6. Confirm firing rate on the unit by clicking on the view icon and selecting the Master Info screen. Also confirm the air pressure settings and combustion settings as described in the **"Blower Check" on page 46**.

NOTE: Technician performing the periodic check up must carry a calibrated combustion analyzer to ensure desired combustion levels are being maintained.

7. Test safety/safety relief valves in accordance with ASME Heater/Pressure Vessel Code Section IV.

Filter Maintenance

1. Inspect quarterly. Replace as needed. The recommended interval is once per year.

NOTE: Use Raypak replacement filters, kit number 014492F.

11. ILLUSTRATED PARTS LIST

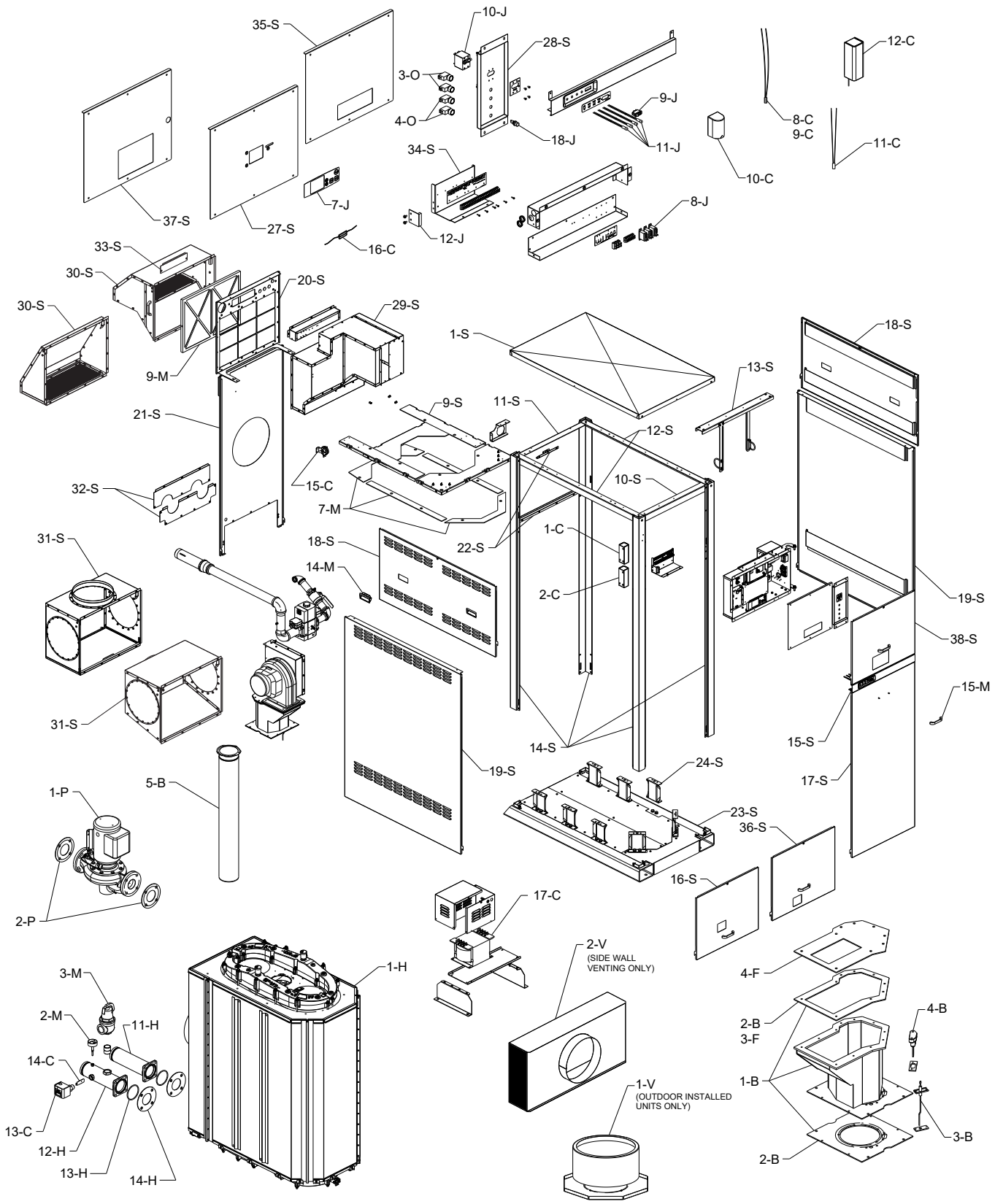

HEAT EXCHANGER DETAIL

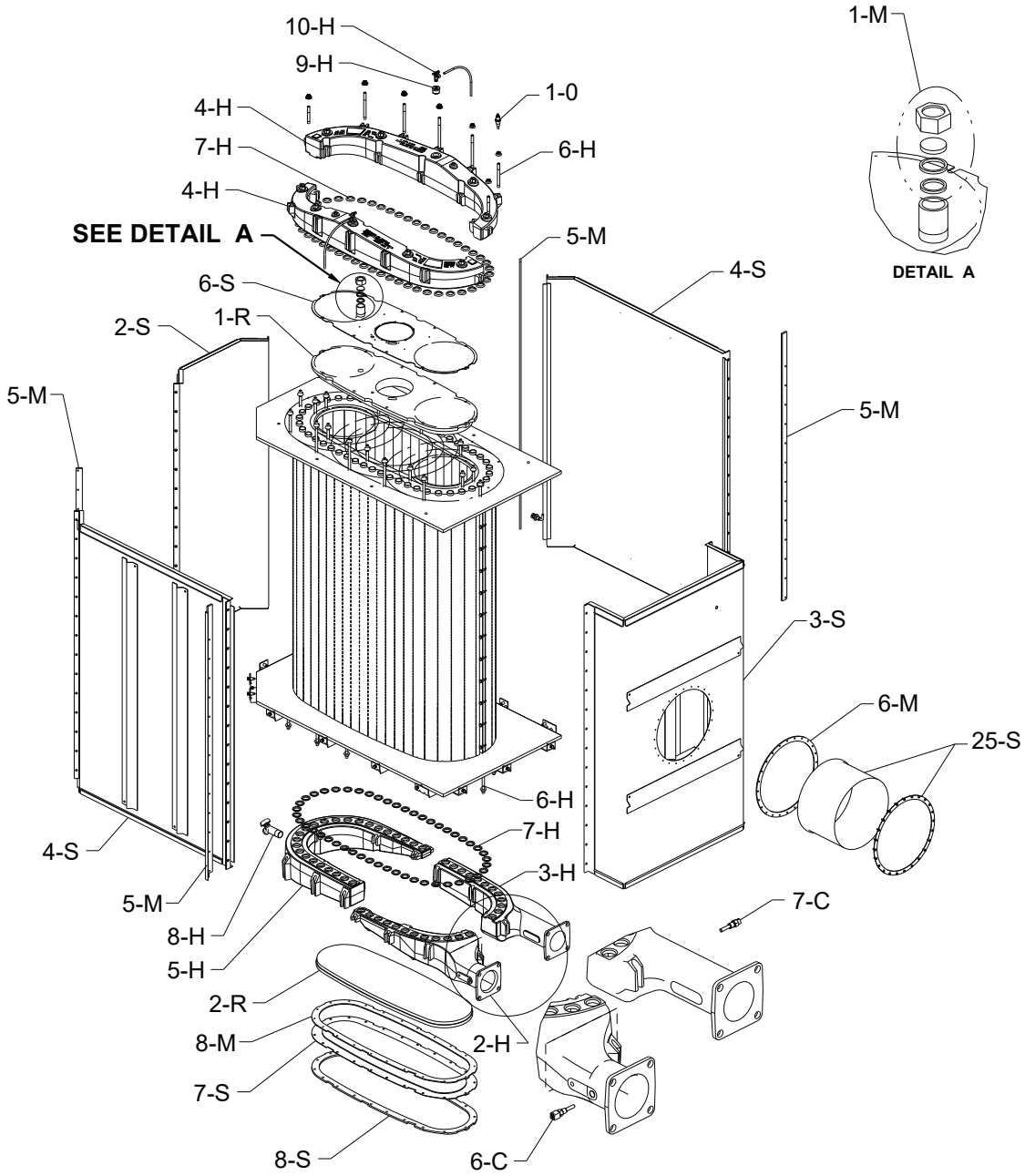

J-BOX DETAIL

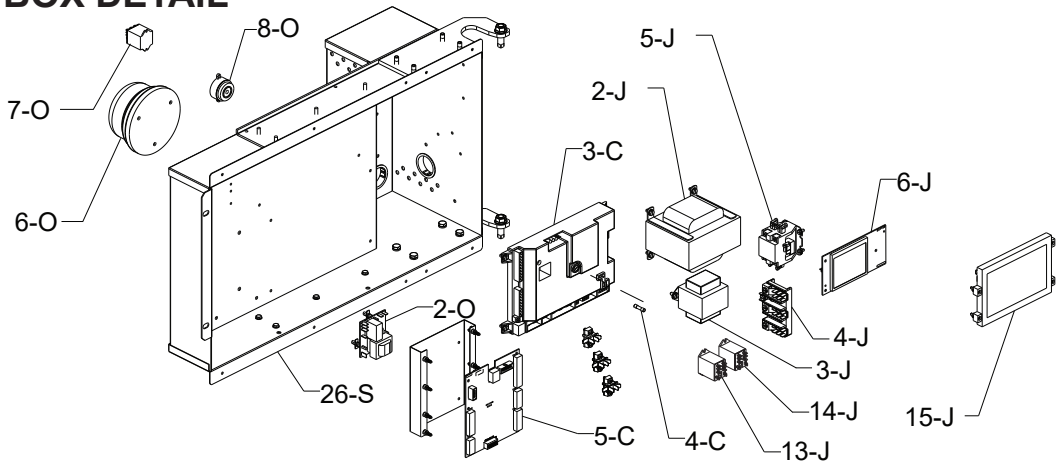

BLOWER DETAIL

MODEL 2503

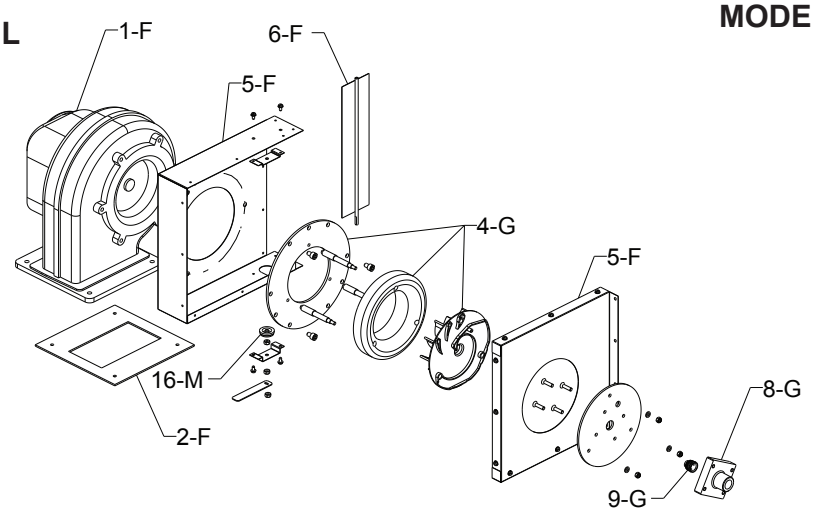

MODELS 3003-4003

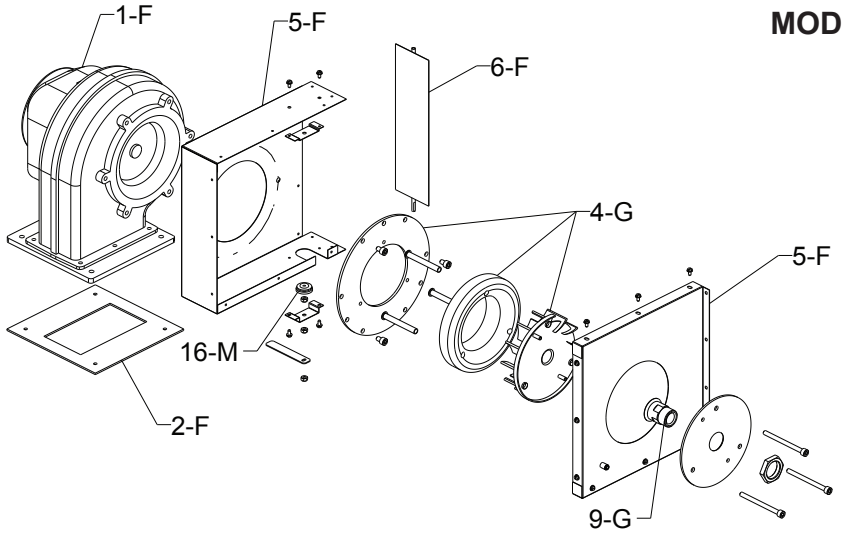

GAS TRAIN DETAIL

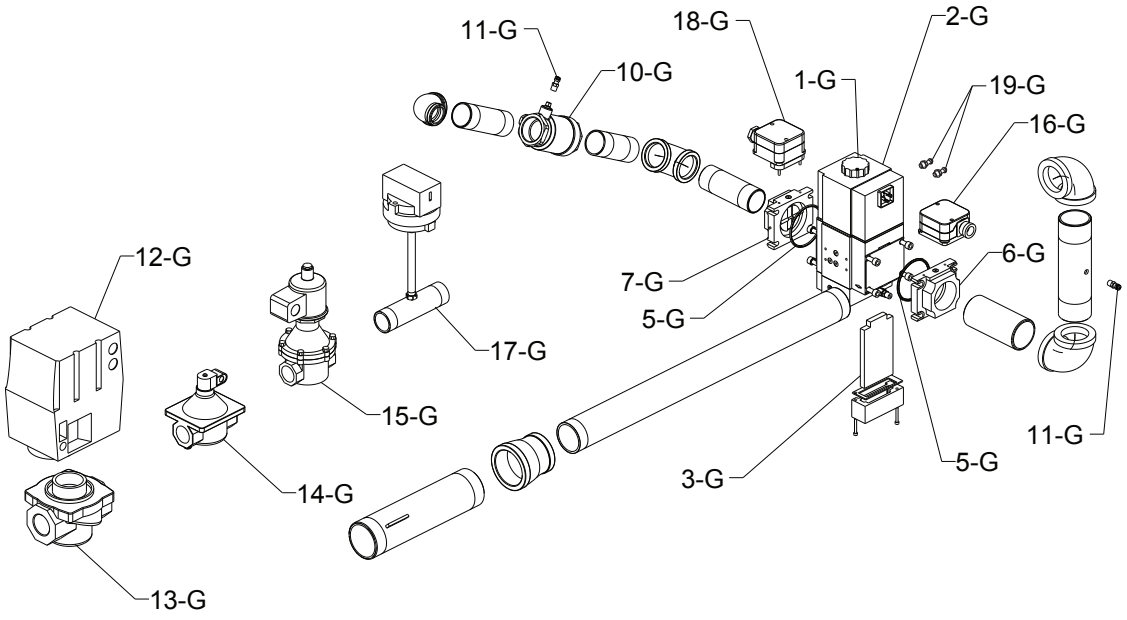

CALL OUT	DESCRIPTION	2503	3003	3503	4003
B	**BURNER ASSEMBLY**				
1-B	Adapter Assembly	014397F	014397F	014397F	014397F
2-B	Adapter Gaskets	014398F	014398F	014398F	014398F
3-B	Flame Sensor Probe	011752F	011752F	011752F	011752F
4-B	Igniter	007400F	007400F	007400F	007400F
5-B	Burner	014399F	014400F	014401F	014402F
C	**CONTROLS**				
1-C	Auto Reset Adjustable High Limit 240F Max	007141F	007141F	007141F	007141F
	Auto Reset Adjustable High Limit 200F Max	012546F	012546F	012546F	012546F
	Auto Reset Adjustable High Limit 180F Max	006445F	006445F	006445F	006445F
2-C	Manual Reset Adjustable High Limit 240F	007144F	007144F	007144F	007144F
	Manual Reset Adjustable High Limit 200F	008081F	008081F	008081F	008081F
	Manual Reset Adjustable High Limit 180F	009554F	009554F	009554F	009554F
3-C	PIM (Platform Ignition Module) Multi Try	014324F	014324F	014324F	014324F
	PIM (Platform Ignition Module) Single Try CSD-1	014325F	014325F	014325F	014325F
4-C	Fuse 5 Amp (Fast Acting)	013971F	013971F	013971F	013971F
5-C	PC Board VERSA IC	013935F	013935F	013935F	013935F
6-C	Inlet Sensor (2 Wire)	013175F	013175F	013175F	013175F
7-C	Outlet/Limit Sensor (4 Wire)	013932F	013932F	013932F	013932F
8-C	System Water Sensor 10K	010787F	010787F	010787F	010787F
9-C	Indirect DHW Sensor 10K	010787F	010787F	010787F	010787F
10-C	Sensor Outdoor Air B-32	010786F	010786F	010786F	010786F
11-C	Sensor Water (Temp Tracker) B-36 thru B-38	012187F	012187F	012187F	012187F
12-C	Indirect Tank Aquastat Control B-65	007148F	007148F	007148F	007148F
13-C	Flow Switch	007142F	007142F	007142F	007142F
14-C	Flow Switch Paddle (Taco)	010026F	010026F	010026F	010026F
15-C	Air Vent Pressure Switch	011760F	011760F	011760F	011760F
16-C	Fuse 5 Amp (Pump) (Slow Blow)	013972F	013972F	013972F	013972F
17-C	Transformer 220/240V 5000VA	015736F	015736F	015736F	015736F
F	**FAN**				
1-F	Blower Combustion Air	014406F	014406F	014407F	014407F
2-F	Blower Gasket	014408F	014408F	014408F	014408F
3-F	Adapter Gasket	014409F	014409F	014409F	014409F
4-F	Adapter Plate	014410F	014410F	014410F	014410F
5-F	Plenum Assembly				
	Units manufactured prior to 01/01/17	014411F	014412F	014412F	014412F
	Units manufactured from 01/01/17	015635F	015636F	015636F	015636F
6-F	Air Shutter	014413F	014414F	014414F	014414F
G	**GAS TRAIN**				
1-G	Valve Gas Modulating 120V (Dungs) Natural Gas	014415F	014416F	014416F	014417F
	Valve Gas Modulating (Dungs) Propane Gas	014415F	014415F	014415F	014415F
2-G	Valve Coil 120V Nat	014693F	014693F	014693F	014694F
	Valve Coil 120V Pro	014693F	014693F	014693F	014693F
3-G	Inlet Gas Filter Natural Gas	012295F	012295F	012295F	014696F
	Inlet Gas Filter Propane Gas	012295F	012295F	012295F	012295F
4-G	Swirler	014418F	014419F	014419F	015833F
5-G	O-rings (Includes Gas Valve and Adapter O-rings)	012440F	012440F	012440F	012440F
6-G	Adapter Gas Valve 2" Inlet (Includes O-rings)	011917F	011917F	011917F	011917F
7-G	Adapter Gas Valve Outlet w/Shutter (Includes O-ring)	014466F	014466F	014466F	014466F
8-G	Adapter Swirl Plate	012298F	N/A	N/A	N/A
9-G	Nozzle Natural Gas	014467F	014490F	014490F	014491F
	Nozzle Propane Gas	012304F	014490F	014490F	014491F
10-G	Valve Gas Ball (WOG)	014468F	014468F	014468F	014468F
11-G	Bleedle Valve 1/8 MPT	007423F	007423F	007423F	007423F
19-G	Bleedle Valve G1/8 BSP	015400F	015400F	015400F	015400F
12-G	Motorized Safety Shut Off Actuator M-1(Optional)	011908F	011908F	011908F	011908F
13-G	Gas Valve Body M1 (Optional)	014469F	014469F	014469F	014469F
14-G	Solenoid Safety Shut Off Valve M-10 (Optional)	014470F	014470F	014470F	014470F
15-G	Vent Valve Gas M-15 (Optional)	014471F	014471F	014471F	014471F
16-G	Switch Low Gas Pressure (Optional)	011770F	011770F	011770F	011770F
17-G	Switch Low Gas Pressure w/M-1 or M-10 (Optional)	007187F	007187F	007187F	007187F
18-G	Switch High Gas Pressure (Standard)	011771F	011771F	011771F	011771F
H	**HEAT EXCHANGER**				
1-H	Heat Transfer Cupro-Nickel Bronze (Includes 23-S)	014472F	014473F	014474F	014475F
	Heat Transfer Copper Bronze (Includes 23-S)	014476F	014477F	014478F	014479F
2-H	Inlet Header Bronze	014480F	014480F	014480F	014480F
3-H	Outlet Header Bronze	014481F	014481F	014481F	014481F
4-H	Return Header Bronze	014482F	014482F	014482F	014482F
5-H	Crossover Header Bronze	014483F	014483F	014483F	014483F
6-H	Stud Bolt				
	Inlet/Outlet/Crossover Headers	014513F	014513F	014513F	014513F
	Return Headers	014514F	014514F	014514F	014514F
7-H	Header Gasket (24 PCS)	007834F	007834F	007834F	007834F
8-H	Drain Valve	006536F	006536F	006536F	006536F
9-H	Manual Air Vent Valve Bushing	016282F	016282F	016282F	016282F
10-H	Manual Air Vent Valve	016970F	016970F	016970F	016970F
15-H	Automatic Air Vent Valve (Not Shown) (For units built prior to 2/15/18)	011866F	011866F	011866F	011866F
11-H	Inlet Adapter Copper Grooved Tube	014484F	014484F	014484F	014484F
12-H	Outlet Adapter Copper Grooved Tube	014485F	014485F	014485F	014485F
13-H	Adapter O-Ring	014486F	014486F	014486F	014486F
14-H	Flange Gasket	015544F	015544F	015544F	015544F

CALL OUT	DESCRIPTION	2503	3003	3503	4003
J	**CONTROL BOX**				
1-J	Control Box Complete	N/A	N/A	N/A	N/A
2-J	Transformer 220/120V 300VA	014403F	014403F	014403F	014403F
3-J	Transformer 115/230V 43VA	014404F	014404F	014404F	014404F
4-J	Terminal Block w / Ground Lug	008523F	008523F	008523F	008523F
5-J	Blower Contactor DPDT 24 VAC	016053F	016053F	016053F	016053F
6-J	LCD Display PC Board	013939F	013939F	013939F	013939F
15-J	Touchscreen Display	015878F	015878F	015878F	015878F
16-J	SD Card Programmed (Not Shown)	015887F	015887F	015887F	015887F
17-J	Lithium Battery 3V (Not Shown)	015888F	015888F	015888F	015888F
7-J	Switch/Decal Membrane	013937F	013937F	013937F	013937F
13-J	Relay DPDT 24V NO (Units manufactured prior to 2/10/16)	011720F	011720F	011720F	011720F
14-J	Relay DPDT 110/120V NO/NC (Units manufactured prior to 2/10/16)	013243F	013243F	013243F	013243F
8-J	Pump Relay SPDT 120 VAC (Wiring Box)	012126F	012126F	012126F	012126F
9-J	Rocker Switch	009493F	009493F	009493F	009493F
10-J	On / Off Shut Down Breaker Switch 30 Amp	014405F	014405F	014405F	014405F
11-J	Indicator Lamp LED	011848F	011848F	011848F	011848F
12-J	PC Board Adapter Status Lights Wiring	014712F	014712F	014712F	014712F
18-J	Reset Switch for Touchscreen	015879F	015879F	015879F	015879F
M	**MISCELLANEOUS COMPONENTS**				
1-M	Combustion Chamber Window (Units manufactured prior to 12/03/18)	015117F	015117F	015117F	015117F
	Combustion Chamber Window (Units manufactured from 12/03/18)	016796F	016796F	016796F	016796F
18-M	Combustion Chamber Window Seal	N/A	N/A	N/A	N/A
2-M	T & P Gauge 0-75 PSI	007205F	007205F	007205F	007205F
	T & P Gauge 0-200 PSI	007399F	007399F	007399F	007399F
	T & P Gauge 0-230 PSI	014221F	014221F	014221F	014221F
3-M	PRV 30 PSI	007750F	007750F	007750F	007750F
	PRV 60 PSI	007755F	007755F	014488F	014488F
	PRV 75 PSI	007757F	014678F	014678F	015275F
	PRV 125 PSI	007759F	012312F	012312F	012312F
	PRV 150 PSI	012313F	012313F	012314F	012314F
4-M	RTV Sealant 2.8 oz. (Not Shown)	008924F	008924F	008924F	008924F
	RTV Sealant 10 oz. (Not Shown)	005755F	005755F	005755F	005755F
5-M	Flue Collector Vertical Seal Gasket	014487F	014487F	014487F	014487F
6-M	Flue Exhaust Adapter Gasket	009690F	009690F	009691F	009691F
7-M	Heat Transfer Heat Shield Gaskets				
	Units manufactured prior to 12/1/14	014489F	014489F	014489F	014489F
	Units manufactured from 12/1/14	015532F	015532F	015532F	015532F
8-M	Heat Transfer Lower Seal Gasket	014682F	014682F	014682F	014682F
9-M	Air filter	014492F	014492F	014492F	014492F
10-M	Touch-up Paint				
	Green	750125	750125	750125	750125
	Cool Dark Gray	750256	750256	750256	750256
11-M	Wire Harness (Not Shown)	014493F	014493F	014493F	014493F
12-M	LCD Display Wire Harness (Not Shown)	014554F	014554F	014554F	014554F
13-M	LED Status Lights Wire Harness (Not Shown)	014555F	014555F	014555F	014555F
17-M	Versa IC Communication Cable	015556F	015556F	015556F	015556F
19-M	Identification Card Harness	017035F	017035F	017035F	017035F
14-M	Plastic Handle	012681F	012681F	012681F	012681F
15-M	Metal Handle	014650F	014650F	014650F	014650F
16-M	Shutter Seal Grommet	014494F	014494F	014494F	014494F
O	**OPTIONS**				
1-O	Remote Sensor (LWCO)	007228F	007228F	007228F	007228F
2-O	Control PC Board (LWCO)	007157F	007157F	007157F	007157F
3-O	Test / Reset Switch (LWCO)	005641F	005641F	005641F	005641F
4-O	Silencer/Reset Switch (Alarm)	005641F	005641F	005641F	005641F
6-O	Alarm Bell 4" 24V	005643F	005643F	005643F	005643F
7-O	Relay 3PDT 24 VAC (Alarm)	014717F	014717F	014717F	014717F
8-O	Alarm Buzzer 24V	005640F	005640F	005640F	005640F
P	**PUMPS***				
1-P	Stainless Steel (Soft Water)	015660F	015661F	015662F	015663F
	Stainless Steel (Medium Water)	015661F	015663F	015664F	015664F
	Stainless Steel (Hard Water)	015663F	015663F	015664F	015664F
	Cast Iron	015666F	015667F	015668F	015669F
2-P	Pump Flange Gasket (4 Bolt)	015544F	015544F	015544F	015544F
R	**REFRACTORY**				
1-R	Combustion Chamber Top	014495F	014495F	014495F	014495F
2-R	Combustion Chamber Bottom	014496F	014496F	014496F	014496F

* For individual pump parts see separate pump parts IPL 9300.100

CALL OUT	DESCRIPTION	2503	3003	3503	4003
S	**SHEETMETAL**				
1-S	Jacket Top	014497F	014497F	014497F	014497F
2-S	Flue Collector Front (Includes 5-M)	014498F	014499F	014500F	014501F
3-S	Flue Collector Rear (Includes 5-M)				
	Units manufactured prior to 12/1/14	014502F	014503F	014504F	014505F
	Units manufactured from 12/1/14	015534F	015535F	015536F	015537F
4-S	Flue Collector Side (Includes 5-M)	014506F	014507F	014508F	014509F
6-S	Combustion Chamber Panel Top	014510F	014510F	014510F	014510F
7-S	Combustion Chamber Panel Bottom	014511F	014511F	014511F	014511F
8-S	Combustion Chamber Bottom Stiffener	014697F	014697F	014697F	014697F
9-S	Heat Transfer Support				
	Units manufactured prior to 12/1/14	014512F	014512F	014512F	014512F
	Units manufactured from 12/1/14	015533F	015533F	015533F	015533F
10-S	Upper Cabinet Supports Front	014515F	014515F	014515F	014515F
11-S	Upper Cabinet Supports Rear	014516F	014516F	014516F	014516F
12-S	Upper Cabinet Supports Side	014517F	014517F	014517F	014517F
13-S	Gas Train Support	014518F	014518F	014518F	014518F
14-S	Vertical Cabinet Supports with Stiffeners	014541F	014542F	014543F	014544F
15-S	Upper Front Panel for LED Lights	014520F	014520F	014520F	014520F
16-S	Jacket Upper Front Panel for LCD Display	014521F	014521F	014521F	014521F
36-S	Jacket Upper Front Panel for LCD Display	015042F	015042F	015042F	015042F
38-S	Jacket Upper Front Panel for Touchscreen	015877F	015877F	015877F	015877F
17-S	Jacket Lower Front Panel (Includes 15-M)	014522F	014523F	014524F	014525F
18-S	Jacket Upper Side Panel	014526F	014526F	014526F	014526F
19-S	Jacket Lower Side Panel	014527F	014528F	014529F	014530F
20-S	Jacket Upper Rear Panel	014531F	014531F	014531F	014531F
21-S	Jacket Lower Rear Panel	014532F	014533F	014534F	014535F
22-S	Filter Mounting Retainers & Bracket	014536F	014536F	014536F	014536F
23-S	Base Assembly	014537F	014537F	014537F	014537F
24-S	Leg Bracket (4 pcs) (8 per Unit)	007306F	007306F	007306F	007306F
25-S	Flue Exhaust Adapter Assembly	014539F	014539F	014540F	014540F
26-S	Control Box Assy	014545F	014545F	014545F	014545F
27-S	Control Box Cover Panel for LCD Digital Display	014546F	014546F	014546F	014546F
35-S	Control Box Cover Panel without LCD Digital Display	015041F	015041F	015041F	015041F
37-S	Control Box Cover Panel for Touchscreen Display	015876F	015876F	015876F	015876F
28-S	Control Box Cover Panel for Power Switch	014547F	014547F	014547F	014547F
29-S	Intake Air Plenum				
	Units manufactured prior to 01/01/17	014548F	014548F	014548F	014548F
	Units manufactured from 01/01/17	015704F	015705F	015705F	015705F
30-S	Intake Air Hood	015706F	015706F	015706F	015706F
31-S	Intake Air Box (Truseal)	015707F	015707F	015708F	015708F
32-S	Access Panel Water Connections	014550F	014550F	014550F	014550F
33-S	Access Panel Wiring Box	014551F	014551F	014551F	014551F
34-S	Wiring Panel Low Voltage	014519F	014519F	014519F	014519F
V	**VENTING**				
1-V	Outdoor Stack	014552F	014552F	014553F	014553F
2-V	Vent Cap Horizontal Thru-the-Wall for Indoor Units	006650	006650	007989	007989

12. IMPORTANT INSTRUCTIONS FOR THE COMMONWEALTH OF MASSACHUSETTS

The Commonwealth of Massachusetts requires compliance with regulation 248 CMR 4.00 and 5.00 for installation of through – the – wall vented gas appliances as follows:

(a) For all side wall horizontally vented gas fueled equipment installed in every dwelling, building or structure used in whole or in part for residential purposes, including those owned or operated by the Commonwealth and where the side wall exhaust vent termination is less than seven (7) feet above finished grade in the area of the venting, including but not limited to decks and porches, the following requirements shall be satisfied:

1. INSTALLATION OF CARBON MONOXIDE DETECTORS. At the time of installation of the side wall horizontal vented gas fueled equipment, the installing plumber or gasfitter shall observe that a hard wired carbon monoxide detector with an alarm and battery back-up is installed on the floor level where the gas equipment is to be installed. In addition, the installing plumber or gasfitter shall observe that a battery operated or hard wired carbon monoxide detector with an alarm is installed on each additional level of the dwelling, building or structure served by the side wall horizontal vented gas fueled equipment. It shall be the responsibility of the property owner to secure the services of qualified licensed professionals for the installation of hard wired carbon monoxide detectors

a. In the event that the side wall horizontally vented gas fueled equipment is installed in a crawl space or an attic, the hard wired carbon monoxide detector with alarm and battery back-up may be installed on the next adjacent floor level.

b. In the event that the requirements of this subdivision can not be met at the time of completion of installation, the owner shall have a period of thirty (30) days to comply with the above requirements; provided, however, that during said thirty (30) day period, a battery operated carbon monoxide detector with an alarm shall be installed.

2. APPROVED CARBON MONOXIDE DETECTORS. Each carbon monoxide detector as required in accordance with the above provisions shall comply with NFPA 720 and be ANSI/UL 2034 listed and IAS certified.

3. SIGNAGE. A metal or plastic identification plate shall be permanently mounted to the exterior of the building at a minimum height of eight (8) feet above grade directly in line with the exhaust vent terminal for the horizontally vented gas fueled heating appliance or equipment. The sign shall read, in print size no less than one-half (1/2) inch in size, “GAS VENT DIRECTLY BELOW. KEEP CLEAR OF ALL OBSTRUCTIONS”.

4. INSPECTION. The state or local gas inspector of the side wall horizontally vented gas fueled equipment shall not approve the installation unless, upon inspection, the inspector observes carbon monoxide detectors and signage installed in accordance with the provisions of 248 CMR 5.08(2)(a)1 through 4.

(b) EXEMPTIONS: The following equipment is exempt from 248 CMR 5.08(2)(a)1 through 4:

1. The equipment listed in Chapter 10 entitled “Equipment Not Required To Be Vented” in the most current edition of NFPA 54 as adopted by the Board; and

2. Product Approved side wall horizontally vented gas fueled equipment installed in a room or structure separate from the dwelling, building or structure used in whole or in part for residential purposes.

(c) MANUFACTURER REQUIREMENTS - GAS EQUIPMENT VENTING SYSTEM PROVIDED. When the manufacturer of Product Approved side wall horizontally vented gas equipment provides a venting system design or venting system components with the equipment, the instructions provided by the manufacturer for installation of the equipment and the venting system shall include:

1. Detailed instructions for the installation of the venting system design or the venting system components; and

2. A complete parts list for the venting system design or venting system.

(d) MANUFACTURER REQUIREMENTS - GAS EQUIPMENT VENTING SYSTEM NOT PROVIDED. When the manufacturer of a Product Approved side wall horizontally vented gas fueled equipment does not provide the parts for venting the flue gases, but identifies “special venting systems”, the following requirements shall be satisfied by the manufacturer:

1. The referenced “special venting system” instructions shall be included with the appliance or equipment installation instructions; and

2. The “special venting systems” shall be Product Approved by the Board, and the instructions for that system shall include a parts list and detailed installation instructions.

(e) A copy of all installation instructions for all Product Approved side wall horizontally vented gas fueled equipment, all venting instructions, all parts lists for venting instructions, and/or all venting design instructions shall remain with the appliance or equipment at the completion of the installation.

GAS PRESSURE SUPERVISION

The Commonwealth of Massachusetts requires listed high and low gas pressure switches (manual reset) for any model with a maximum firing input greater than 1,000,000 Btu/Hr in accordance with 248 CMR 7.04(11)(d).

A gas pressure regulator (field supplied) is required in the gas train ahead of the heater, for heaters having input rates greater than 1,000,000 Btu/Hr, in accordance with 248 CMR 7.04 Figure 3B requirements.

LIMITED PARTS WARRANTY
MVB – TYPES H AND WH
MODELS 2503-4003

SCOPE

Raypak, Inc. ("Raypak") warrants to the original owner that all parts of this heater which are actually manufactured by Raypak will be free from failure under normal use and service for the specified warranty periods and subject to the conditions set forth in this Warranty. Labor charges and other costs for parts removal or reinstallation, shipping and transportation are not covered by this Warranty but are the owner's responsibility.

HEAT EXCHANGER WARRANTY

Domestic Hot Water

Five (5) years from date of heater installation. Includes copper heat exchanger with bronze waterways.
Ten (10) years from date of heater installation. Includes only cupro-nickel heat exchanger with bronze waterways.

Space Heating (Closed Loop System)

Ten (10) years from date of heater installation. Includes both cupro-nickel and copper heat exchanger with bronze water-ways.

Thermal Shock Warranty

Twenty-five (25) years from date of heater installation against "Thermal Shock" (excluded, however, if caused by heater operation at large changes exceeding 150°F between the water temperature at intake and heater temperature, or operating at heater temperatures exceeding 230°F).

ANY OTHER PART MANUFACTURED BY RAYPAK

One (1) year warranty from date of heater installation, or eighteen (18) months from date of factory shipment based on Raypak's records, whichever comes first.

SATISFACTORY PROOF OF INSTALLATION DATE, SUCH AS INSTALLER INVOICE, IS REQUIRED. THIS WARRANTY WILL BE VOID IF THE HEATER RATING PLATE IS ALTERED OR REMOVED.

ADDITIONAL WARRANTY EXCLUSIONS

This warranty does not cover failures or malfunctions resulting from:

1. Failure to properly install, operate or maintain the heater in accordance with our printed instructions provided;
2. Abuse, alteration, accident, fire, flood and the like;
3. Sediment or lime build-up, freezing, or other conditions causing inadequate water circulation;
4. High velocity flow exceeding heater design rates;
5. Failure of connected systems devices, such as pump or controller;
6. Use of non-factory authorized accessories or other components in conjunction with the heater system;
7. Failing to eliminate air from, or replenish water in, the connected water system;
8. Chemical contamination of combustion air or use of chemical additives to water.

PARTS REPLACEMENT

Under this Warranty, Raypak will furnish a replacement for any failed part. The failed part must first be returned to Raypak if requested, with transportation charges prepaid, and all applicable warranty conditions found satisfied. The replacement part will be warranted for only the unexpired portion of the original warranty. Raypak makes no warranty whatsoever on parts not manufactured by it, but Raypak will apply any such warranty as may be provided to it by the parts manufacturer.

TO MAKE WARRANTY CLAIM

Promptly notify the original installer, supplying the model and serial numbers of the unit, date of installation and description of the problem. The installer must then notify his Raypak distributor for instructions regarding the claim. If either is not available, contact Service Manager, Raypak, Inc., 2151 Eastman Avenue, Oxnard, CA 93030 or call (805) 278-5300. In all cases proper authorization must first be received from Raypak before replacement of any part.

EXCLUSIVE WARRANTY - LIMITATION OF LIABILITY

This is the only warranty given by Raypak. No one is authorized to make any other warranties on Raypak's behalf. THIS WARRANTY IN LIEU OF ALL OTHER WARRANTIES, EXPRESS OR IMPLIED, INCLUDING BUT NOT LIMITED TO IMPLIED WARRANTIES OF MERCHANTABILITY AND FITNESS FOR A PARTICULAR PURPOSE. RAYPAK'S SOLE LIABILITY AND THE SOLE REMEDY AGAINST RAYPAK WITH RESPECT TO DEFECTIVE PARTS SHALL BE AS PROVIDED IN THIS WARRANTY. IT IS AGREED THAT RAYPAK SHALL HAVE NO LIABILITY, WHETHER UNDER THIS WARRANTY, OR IN CONTRACT, TORT, NEGLIGENCE OR OTHERWISE, FOR ANY SPECIAL, CONSEQUENTIAL, OR INCIDENTAL DAMAGE, INCLUDING DAMAGE FROM WATER LEAKAGE. Some states do not allow limitations on how long an implied warranty lasts, or for the exclusion of incidental or consequential damages. So the above limitation or exclusion may not apply to you.

This Limited Warranty gives you specific legal rights. You may also have other rights which may vary from state to state. We suggest that you complete the information below and retain this certificate in the event warranty service is needed. Reasonable proof of the effective date of the warranty (date of installation) must be presented, otherwise, the effective date will be based on the rate of manufacture plus thirty (30) days.

Original Owner	Model Number
Mailing Address	Serial Number
	Date of Installation
City State Zip Code	Installation Site
Daytime Telephone Number	Contractor/Installer

RAYPAK, INC • 2151 Eastman Avenue • Oxnard, CA 93030-9786 • (805) 278-5300 • Fax (800) 872-9725 • www.raypak.com

START-UP CHECKLIST FOR FAN-ASSISTED RAYPAK PRODUCTS

This start-up checklist is to be completely filled out by the service technician starting up the Raypak boilers or heaters for the first time. All information may be used for warranty purposes and to ensure that the installation is correct. Additionally this form will be used to record all equipment operation functions and required settings.

GAS SUPPLY DATA

Regulator Model & Size _____ / _____CFH
Gas Line Size (in room) _____In. NPT
Length of Gas Line _____Eq Ft
Low Gas Pressure Setting _____In. WC
High Gas Pressure Setting_____In. WC
Gas Shut-Off Valve Type _____
(Ball, Lube cock)
Port _____Std_____Full

VISUAL INSPECTION OF COMPONENTS

Verify inspection was done and condition of components are in good working order with a "yes"
Wiring Harness _____ Y/N
Burner (flame) _____ Y/N
Refractory (Visual) _____ Y/N
Remote flame sense _____ Y/N
Covers in place for outdoor_____ Y/N

VENTING

Vent Size: _____ Stack Height:_____
Vent Material: _____ sketch vent on reverse side ***
Vent Termination Type: _____
Combustion Air Openings: Low _____ in^2
Ventilation Air High _____ in^2

HO_2T (XVers ONLY, If equipped)

O_2 sensor cable is connected to the O_2 sensor _____
DDC power switch is in the ON position _____
Maintenance switch is in the OFF position _____
Actuator stops are in the correct position _____

CLEARANCES

Front Clearance _____In.
Right Side Clearance _____In.
Left Side Clearance _____In.
Rear Clearance _____In.
Overhead Clearance _____In.

ELECTRICAL

Voltage Supply (VAC) No Load____
Load____
Voltage -24 VAC _____VAC
Voltage Com to Ground _____VAC
Hot Surface Igniter _____Ohms
Auto High Limit Setting _____deg F
Manual Reset High-Limit Setting _____deg F
Operating Control Setting _____deg F

Sketch plumbing on reverse side

WATER SUPPLY

Flow Rate in GPM or Delta T _____If Avail
Measure flow rate at full fire
Pump Purge setting _____Minutes
Low Water Cutoff _____Test
Plumbing Size _____
Pump Size: _____(Boiler) Pump HP: _____
Impeller trim_____ Pump Model_____
Louvers _____ Screens_____

RAYMOTE (If equipped)

Wi-Fi signal available in boiler room _____
Boiler provisioned with valid WiFi credentials _____
Wi-Fi signal strength (RSSI > -80) _____

EMISSIONS SETTINGS AND TEST INFORMATION

	(AT FULL FIRE)	(AT MIN. FIRE)	Nominal Factory Recommended Settings
Blower Suction Pressure	_____In. WC	_____In. WC	See manual or card tag
Supply Gas Pressure	_____In. WC	_____In. WC	See manual or card tag
Verify stable pressure static and dynamic condition			

The following measurements must be obtained with a calibrated combustion analyzer.

O_2	_____%	_____%	See manual
CO	_____PPM	_____PPM	Less than 100 PPM
CO_2	_____%	_____%	See manual

Model Number: _____
*** Note: draw venting with details, such as extractors, barometric dampers, blast dampers or draft inducers

Serial Number: _____
Site Elevation Above Sea Level _____Ft.

Job Name _____
Address _____
Physical Location of Boiler: Indoors_____; Outdoors_____; Ground Level_____; Roof_____; Below Grade_____
Mechanical Contractor / Installer _____
Date and Time of Start-up _____Print Name and Signature of Start-up Technician _____

Information must be faxed to: (805) 278-5496 in order to ensure warranty consideration Attn: Service Manager

Raypak®
A Rheem® Company

ISO 9001
REGISTERED QUALITY MANAGEMENT SYSTEM

www.raypak.com

Raypak, Inc., 2151 Eastman Avenue, Oxnard, CA 93030 (805) 278-5300 Fax (805) 278-5468
Litho in U.S.A.